E40098

Screw-in adapter for process sensors

Adapter SI0/G1/4/MS

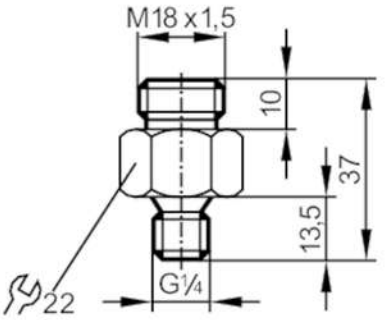

Application		
Application		for industrial applications
Media		liquids and gases
Pressure rating	[bar]	30
Tests / approvals		
Pressure Equipment Directive		A possible classification to PED depends on the application and has to be carried out by the user / operator.
Pressure Equipment Directive EAC		The adapter is intended for use in devices, machines and installations that do not fall under the categories of the technical rule TR CU 032/2013.
Safety instructions		The compatibility between medium and product material has to be checked in all applications.
Mechanical data		
Weight	[g]	60.6
Dimensions	[mm]	M18 x 1.5
Thread designation		M18 x 1.5
Materials		brass (2.0401)
Sensor connection		M18 x 1,5 internal thread
Process connection		threaded connection G 1/4
Insertion depth	[mm]	13.5; (measuring probe SID, SFD, TN)
Accessories		
Items supplied		sealings: 1, AFM
Remarks		
Remarks		In applications >30 bar use a suitable high-pressure adapter.
Pack quantity		1 pcs.