LUMOTAST 75 IP65, illuminated pushbutton, round collar, protruding bezel, momentary contact function, 2 NC + 2 NO



fields of application

- Measurement-control-regulation
- Mechanical and system engineering
- Signalling systems

special features

- Water jet protection class IP 65 on front
- Mounting hole diameter 16.2 mm
- 3 collar shapes – also rectangular
- Lamp socket: T4.5: full-surface illumination with LED is possible
- Silver contacts with self-cleaning snap-action contact bridge for safe switching, suitable for large currents (max. 250 V / 4 A)
- Contact configurations: 1 NC +1 NO or 2 NC + 2 NO
- Solder terminal

description

LUMOTAST 75 illuminated pushbuttons and signal lamps have been in use for decades. They are the most successful mono-switches in RAFI history. The wide range of collar shapes in classic design and the established terminal and legending concept make the LUMOTAST 75 series one of your most reliable components. The pushbuttons and signal lamps are available in IP 65 protection class according to DIN. They come with a 2.5 mm higher collar than the variant with IP 40, due to the additional seal.
Lenses and diffusing discs must be ordered separately.

technical data

general

Collar color	black
Collar shape	round
Operating temperature, min.	-25 °C
Operating temperature, max.	55 °C
Storage temperature, min.	-40 °C
Storage temperature, max.	80 °C
illuminated	Yes
Lamp socket	T4.5
Packaging	Box
Packaging unit	10 pcs.
net weight	11 g
Operating life electrical	200,000 (2A / 250V AC) cycles 60.000 (4A / 250V AC) cycles
B10	260,000 cycles
Degree of protection, front side, according to DIN EN 60529	IP65

direct links

- RAFI eCatalog

The information in this data sheet only contains general descriptions and / or performance features, which may not apply precisely as described to the respective application, and which my change due to further product enhancements. The technical data, illustrations and other information about our products are the mere results of individual technical testing. These descriptions and other product features are only binding if they expressly agreed upon at the time of the conclusion of a binding contract. In all other cases, we reserve the right to make technical changes as well as changes of availability. Pictures and other graphic illustrations are approximations only. All product names may be trademarks or brand names of the RAFI Group or any other sub-supplier of RAFI. The use of such by any third parties for their own purposes may infringe the rights of the respective entity holding those rights.

RAFI GmbH & Co. KG

Ravensburger Str. 128-134
88276 Berg / Ravensburg
Germany
www.rafi-group.com,
info.headquarters@rafi-group.com

Environment resistance	IEC 60068-2-14 IEC 60068-2-30 IEC 60068-2-33 IEC 60068-2-78
Protection class	II
MOQ order	20 pcs.
RoHS compliant	Yes
REACH compliant	Yes

mounting diameters

Outside dimension, length	19 mm
Outside dimension, width	19 mm
Mounting hole	16.2 mm
Mounting depth	57.5 mm
Installation height	10.5 mm
Collar dimension	19 mm

mechanical data

Actuation function	momentary contact function
Operating force, max.	6.5 N
Operating force, min.	3 N
Operating travel, max.	2.5 mm
Contact function	2 NC + 2 NO
Contact system	Bridge-snap-action contact
Contact material	Silver
Fixing	Threaded ring
Solderability	Yes
Terminal on the rear	Solder terminal

electrical data

Rated voltage, min.	12 V
Rated voltage, max.	230 V
Rated current, min.	0.05 A
Rated current, max.	4 A

The information in this data sheet only contains general descriptions and / or performance features, which may not apply precisely as described to the respective application, and which my change due to further product enhancements. The technical data, illustrations and other information about our products are the mere results of individual technical testing. These descriptions and other product features are only binding if they expressly agreed upon at the time of the conclusion of a binding contract. In all other cases, we reserve the right to make technical changes as well as changes of availability. Pictures and other graphic illustrations are approximations only. All product names may be trademarks or brand names of the RAFI Group or any other sub-supplier of RAFI. The use of such by any third parties for their own purposes may infringe the rights of the respective entity holding those rights.

RAFI GmbH & Co. KG

Ravensburger Str. 128-134
88276 Berg / Ravensburg
Germany
www.rafi-group.com,
info.headquarters@rafi-group.com

drawings

Dimensioned drawing

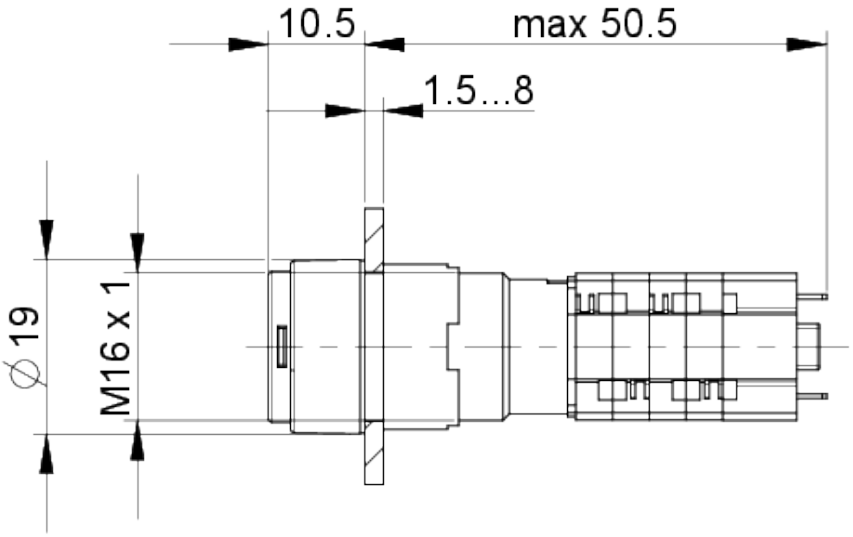

Mounting hole drawing

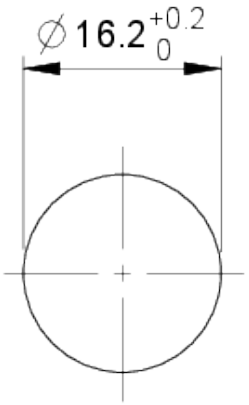

The information in this data sheet only contains general descriptions and / or performance features, which may not apply precisely as described to the respective application, and which my change due to further product enhancements. The technical data, illustrations and other information about our products are the mere results of individual technical testing. These descriptions and other product features are only binding if they expressly agreed upon at the time of the conclusion of a binding contract. In all other cases, we reserve the right to make technical changes as well as changes of availability. Pictures and other graphic illustrations are approximations only. All product names may be trademarks or brand names of the RAFI Group or any other sub-supplier of RAFI. The use of such by any third parties for their own purposes may infringe the rights of the respective entity holding those rights.

RAFI GmbH & Co. KG

Ravensburger Str. 128-134
88276 Berg / Ravensburg
Germany
www.rafi-group.com,
info.headquarters@rafi-group.com