E16DU, E45DU, E80DU, E140DU electronic overload relays
0.10 to 140 A


2CDC231001F0007

E16DU-1.0


2CDC231002F0006

E45DU-30


2CDC231003F0006

E80DU-80


2CDC231004F0006

E140DU-140

Description

The E16DU up to E140DU are self-supplied electronic overload relays, which means no extra external supply is needed. It offers reliable protection for motors in the event of overload or phase failure. Easy to use like a thermal overload relay and compatible with standard motor applications, the electronic overload relay is convincing, above all, due to its wide setting range, high accuracy, high operational temperature range and the possibility to select a trip class (10E, 20E, 30E). Further features are the temperature compensation, trip contact (N.C.), signal contact (N.O.), automatic or manual reset selectable, trip-free mechanism, STOP and TEST function and a trip indication. The overload relays are connected directly to the contactors. Single mounting kits are available as accessory.

Ordering details

Setting range A	Short-circuit protective device	Trip class	Type	Order code		Weight (1 pce) kg
E16DU electronic overload relays						
0.10 ... 0.32	1 A, Fuse type gG	10E, 20E, 30E	E16DU-0.32	1SAX111001R1101		0.150
0.30 ... 1.00	4 A, Fuse type gG	10E, 20E, 30E	E16DU-1.0	1SAX111001R1102		0.150
0.80 ... 2.70	10 A, Fuse type gG	10E, 20E, 30E	E16DU-2.7	1SAX111001R1103		0.150
1.90 ... 6.30	20 A, Fuse type gG	10E, 20E, 30E	E16DU-6.3	1SAX111001R1104		0.150
5.70 ... 18.9	50 A, Fuse type gG	10E, 20E, 30E	E16DU-18.9	1SAX111001R1105		0.150
E45DU electronic overload relays						
9.00 ... 30.0	160 A, Fuse type gG	10E, 20E, 30E	E45DU-30	1SAX211001R1101		0.350
15.0 ... 45.0	160 A, Fuse type gG	10E, 20E, 30E	E45DU-45	1SAX211001R1102		0.350
E80DU electronic overload relay						
27.0 ... 80.0 A	250 A	10E, 20E, 30E	E80DU-80	1SAX311001R1101		0.770
E140DU electronic overload relay						
50.0 ... 140.0 A	400 A	10E, 20E, 30E	E140DU-140	1SAX321001R1101		0.915

Main dimensions mm, *inches*

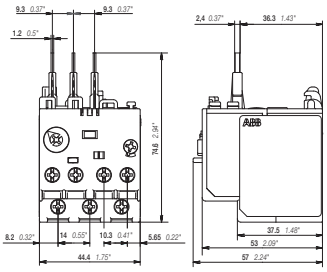

E16DU

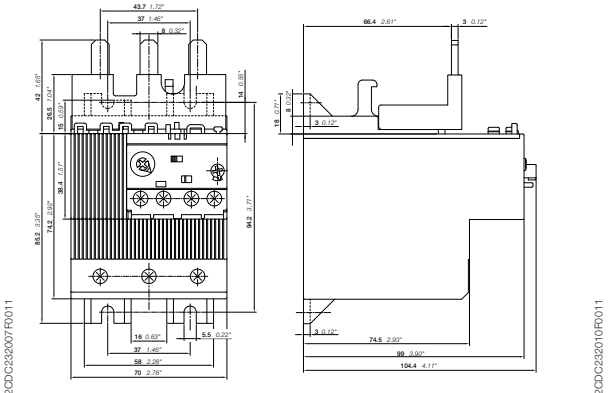
2CDC232007F0011

E80DU

2CDC232010F0011

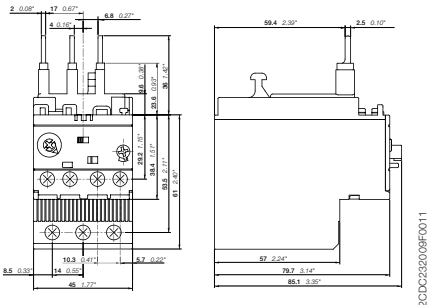
2CDC232009F0011

E45DU

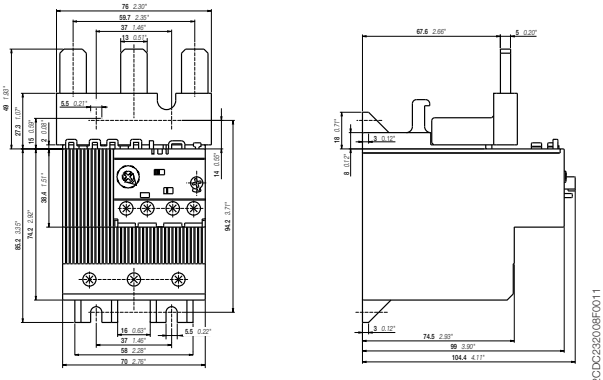
2CDC232008F0011

E140DU

2CDC107030C0201

E16DU, E45DU, E80DU, E140DU electronic overload relays
Technical data

Main circuit – Utilization characteristics according to IEC/EN

Type	E16DU	E45DU	E80DU	E140DU
Standards	IEC 60947-1 / 60947-4-1 / 60947-5-1 and EN 60947-1 / 60947-4-1 / 60947-5-1			
Rated operational voltage U_e	690 V AC		1000 V AC	
Rated frequency	50/60 Hz			
Trip class	10E, 20E, 30E, selectable			
Number of poles	3			
Duty time	100 %			
Operating frequency without early tripping	Up to 15 operations/h, see "Technical diagram – Intermittent periodic duty"			
Rated impulse withstand voltage U_{imp}	6 kV			
Rated insulation voltage U_i	690 V AC		1000 V AC	

Auxiliary circuit according to IEC/EN

Type		E16DU	E45DU	E80DU	E140DU
Rated operational voltage U_e		600 V AC / DC			
Conventional free air thermal current I_{th}		6 A			
Rated frequency		DC, 50/60 Hz			
Number of poles		1 N.C. + 1 N.O.			
I_e / Rated operational current AC-15 acc. to IEC/EN 60947-5-1 for utilization category					
110-120 V	**50/60 Hz**	3.00 A			
220-230-240 V	**50/60 Hz**	3.00 A			
440 V	**50/60 Hz**	1.10 A			
480-500 V	**50/60 Hz**	0.72 A			
I_e / Rated operational current DC-13 acc. to IEC/EN 60947-5-1 for utilization category					
24 V		1.50 A			
60 V		0.55 A			
110-120-125 V		0.55 A			
250 V		0.27 A			
Minimum switching capacity		12 V / 3 mA			
Short-circuit protective device		6 A, Fuse type gG			
Rated impulse withstand voltage U_{imp}		6 kV			
Rated insulation voltage U_i		690 V			

Technical diagram – Intermittent periodic duty

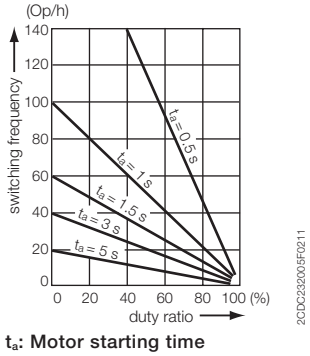

t_a: Motor starting time

2CDC107030C0201

E16DU, E45DU, E80DU, E140DU electronic overload relays
Technical data

Main circuit – Utilization characteristics according to UL/CSA

Type	E16DU	E45DU	E80DU	E140DU
Standards	UL 508, CSA 22.2, No. 14			
Maximum operational voltage	600 V AC			
Trip rating	125 % of FLA			
Full load amps (FLA)	See table "Full load amps and short-circuit protective device"			
Short-circuit rating RMS symmetrical	See table "Full load amps and short-circuit protective device"			
Short-circuit protective device	See table "Full load amps and short-circuit protective device"			

Auxiliary circuit according to UL/CSA

Type	E16DU	E45DU	E80DU	E140DU
Contact rating	B600,Q300			
Conventional thermal current	5 A			

Full load amps and short-circuit protective device

Type	Full load amps (FLA)	Short-circuit protective device					
		480 V AC		600 V AC			
		SCCR	Fuse type	SCCR	Fuse type	SCCR	Fuse type
E16DU-0.32	0.32 A	50 kA	2 A, Class J	5 kA	2 A, K5 / RK5	100 kA	2 A, Class J
E16DU-1.0	1.00 A	50 kA	2 A, K5 / RK5	5 kA	2 A, K5 / RK5	100 kA	2 A, Class J
E16DU-2.7	2.70 A	50 kA	4 A, K5 / RK5	5 kA	4 A, K5 / RK5	100 kA	4 A, Class J
E16DU-6.3	6.30 A	50 kA	15 A, K5 / RK5	5 kA	15 A, K5 / RK5	100 kA	15 A, Class J
E16DU-18.9	18.90 A	50 kA	30 A, K5 / RK5	5 kA	30 A, K5 / RK5	100 kA	30 A, Class J

Type	Full load amps (FLA)	Short-circuit protective device			
		600 V AC			
		SCCR	Fuse type	SCCR	Fuse type
E45DU-30	30 A	18 kA	150 A, K5 / RK5	100 kA	150 A, Class J
E45DU-45	45 A	18 kA	200 A, K5 / RK5	100 kA	200 A, Class J

Type	Full load amps (FLA)	Short-circuit protective device	
		600 V AC	
		SCCR	Fuse type
E80DU-80	80 A	18 kA	300 A, K5 / RK5

Type	Full load amps (FLA)	Short-circuit protective device	
		600 V AC	
		SCCR	Fuse type
E140DU-140	140 A	18 kA	400 A, K5 / RK5

2CDC107030C0201

E16DU, E45DU, E80DU, E140DU electronic overload relays
Technical data

General data

Type			E16DU	E45DU	E80DU	E140DU
Pollution degree			3			
Phase loss sensitive			Yes			
Ambient air temperature						
	Operation	Open - compensated without derating	-25 ... +70 °C			
	Storage		-50 ... +85 °C			
Ambient air temperature compensation			Continuous			
Maximum operating altitude permissible			2000 m			
Resistance to shock acc. to IEC 60068-2-27			15 g / 11 ms			
Resistance to vibrations acc. to IEC 60068-2-6			5 g / 3 ... 150 Hz			
Mounting position			Position 1-6			
Mounting			Mount on the contactor and tighten the screws of the main circuit terminals or with single mounting kit			
Degree of protection			IP20			

6

Electrical connection

Main circuit

Type			E16DU	E45DU	E80DU	E140DU
Connecting capacity						
	Rigid	**1 x**	1 ... 4 mm²	2.5 ... 16 mm²	6 ... 95 mm²	6 ... 95 mm²
		2 x	1 ... 4 mm²	2.5 ... 16 mm²	6 ... 35 mm²	6 ... 35 mm²
	Flexible with insulated ferrule	**1 x**	0.75 ... 2.5 mm²	2.5 ... 10 mm²	6 ... 70 mm²	6 ... 70 mm²
		2 x	0.75 ... 2.5 mm²	2.5 ... 10 mm²	6 ... 35 mm²	6 ... 35 mm²
	Stranded acc. to UL/CSA	**1 x**	AWG 16-10	AWG 14-6	AWG 10-0	AWG 8-0
		2 x	AWG 16-10	AWG 14-6	-	-
	Flexible acc. to UL/CSA	**1 x**	AWG 16-10	AWG 14-6	AWG 10-0	AWG 8-0
		2 x	AWG 16-10	AWG 14-6	-	-
Stripping length			9 mm	13 mm	-	-
Tightening torques			0.8 - 1.5 Nm / 7 lb.in	2.3 - 2.6 Nm / 22 lb.in	6 - 6.5 Nm / 53 lb.in	6 - 6.5 Nm / 53 lb.in
Connection screw			M3.5 (Pozidriv 2)	M5 (Pozidriv 2)	M8 (inbus 4)	M8 (inbus 4)

Auxiliary circuit

Type			E16DU	E45DU	E80DU	E140DU
Connecting capacity						
	Rigid	**1 or 2 x**	1 ... 4 mm²			
	Flexible with ferrule	**1 or 2 x**	0.75 ... 2.5 mm²			
	Flexible with insulated ferrule	**1 or 2 x**	0.75 ... 2.5 mm²			
	Flexible	**1 or 2 x**	0.75 ... 2.5 mm²			
	Stranded acc. to UL/CSA	**1 or 2 x**	AWG 16-10			
	Flexible acc. to UL/CSA	**1 or 2 x**	AWG 16-10			
Stripping length			9 mm			
Tightening torques			0.8 ... 1.2 Nm / 7 lb.in			
Connection screw			M3.5 (Pozidriv 2)			

2CDC107030C0201

E16DU, E45DU, E80DU, E140DU electronic overload relays
Accessories


2CDC231003F0010

DB16E


2CDC231004F0010

DB45E


2CDC231005F0010

DB80E


2CDC231006F0010

DB140E

Description

Single mounting kits are available as accessory for E16DU, E45DU, E80DU, and E140DU. The single mounting kits offer the possibility to mount the overload relay separately from the contactor.

Ordering details

For electronic overload relays	Description	Type	Order code		Weight (1 pce) kg
Single mounting kits					
E16DU	Single mounting kit	DB16E	1SAX101110R0001		0.035
E45DU	Single mounting kit	DB45E	1SAX201110R1001		0.090
E80DU	Single mounting kit	DB80E	1SAX301110R1001		0.145
E140DU	Single mounting kit	DB140E	1SAX301110R1002		0.145

Main dimensions mm, *inches*

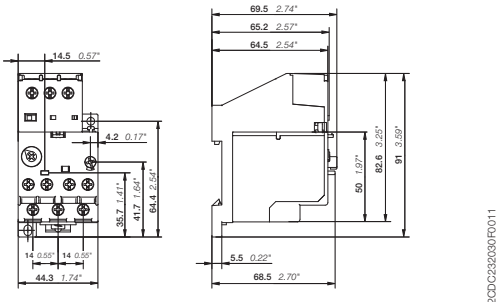
2CDC232030F0011

DB16E

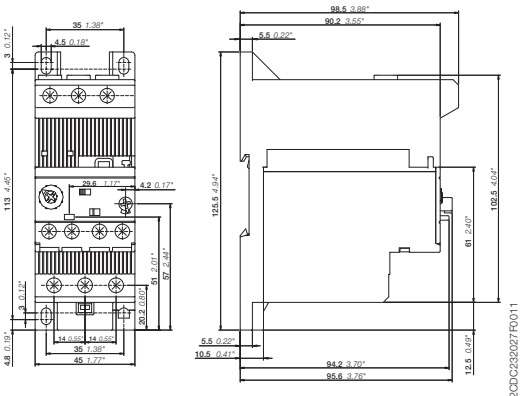
2CDC232027F0011

DB45E

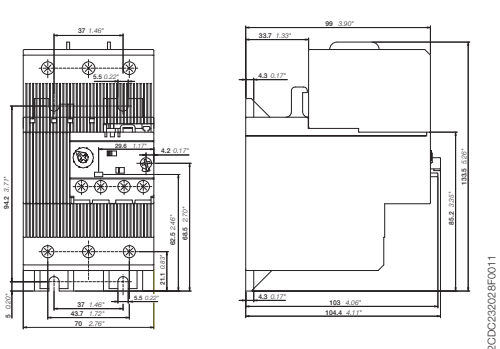
2CDC232028F0011

DB80E

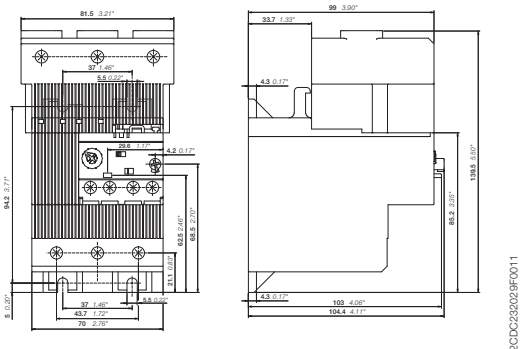
2CDC232029F0011

DB140E