2012-12-05

Centrefeed Dispenser

M2

Performance
Design



essity

Manufactured by Essity Hygiene and Health AB
SE-40503 Göteborg, Sweden
Visiting address: Mölndals Bro 2, Mölndal
www.essity.com, www.torkglobal.com
Made in Germany
Patents/Brevets/Patentes: www.essity.com/patents

Essity UK Limited
Southfields Road, Dunstable,
Bedfordshire, LU6 3EJ, UK

www.torkglobal.com

TORK®

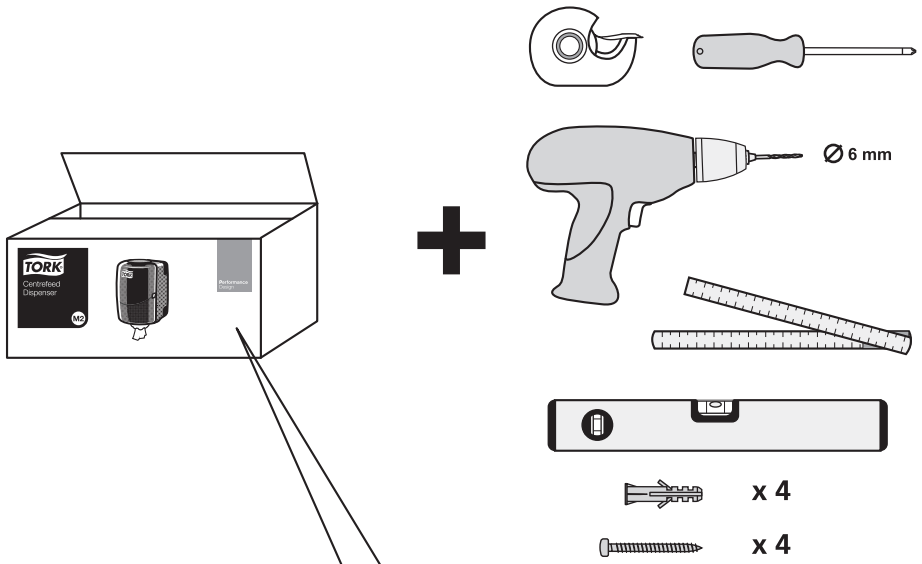
TORK
Centrefeed Dispenser
M2
Performance Design
Ø 6 mm
x 4
x 4

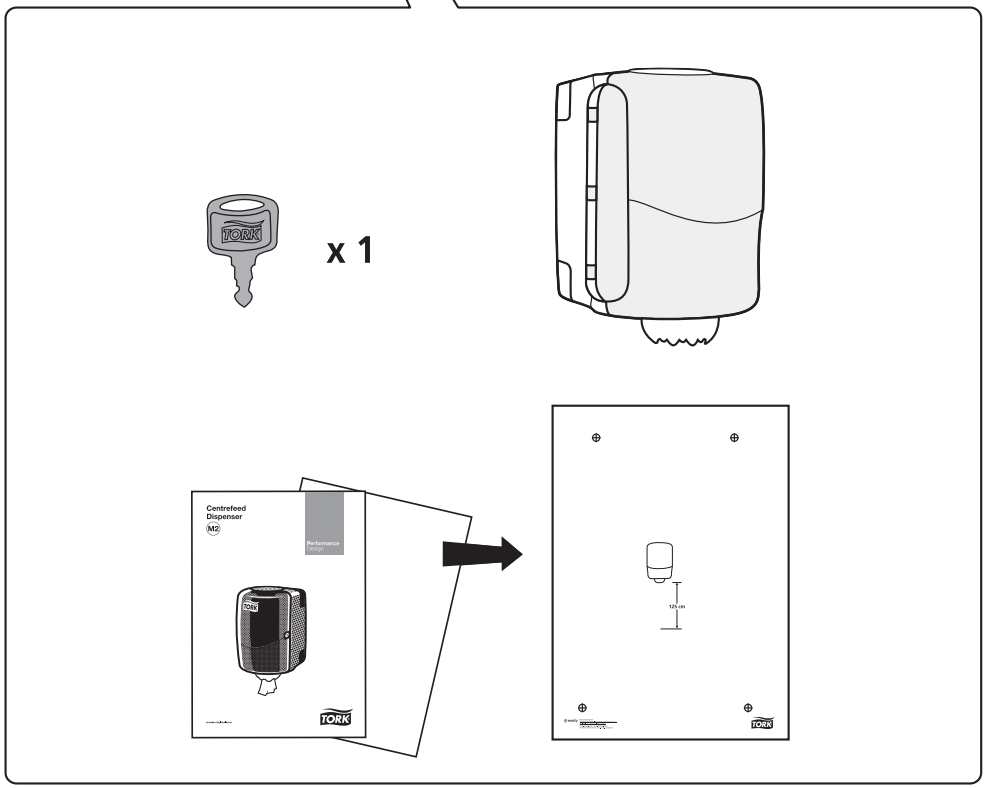
x 1
Centrefeed Dispenser
M2
Performance Design
TORK

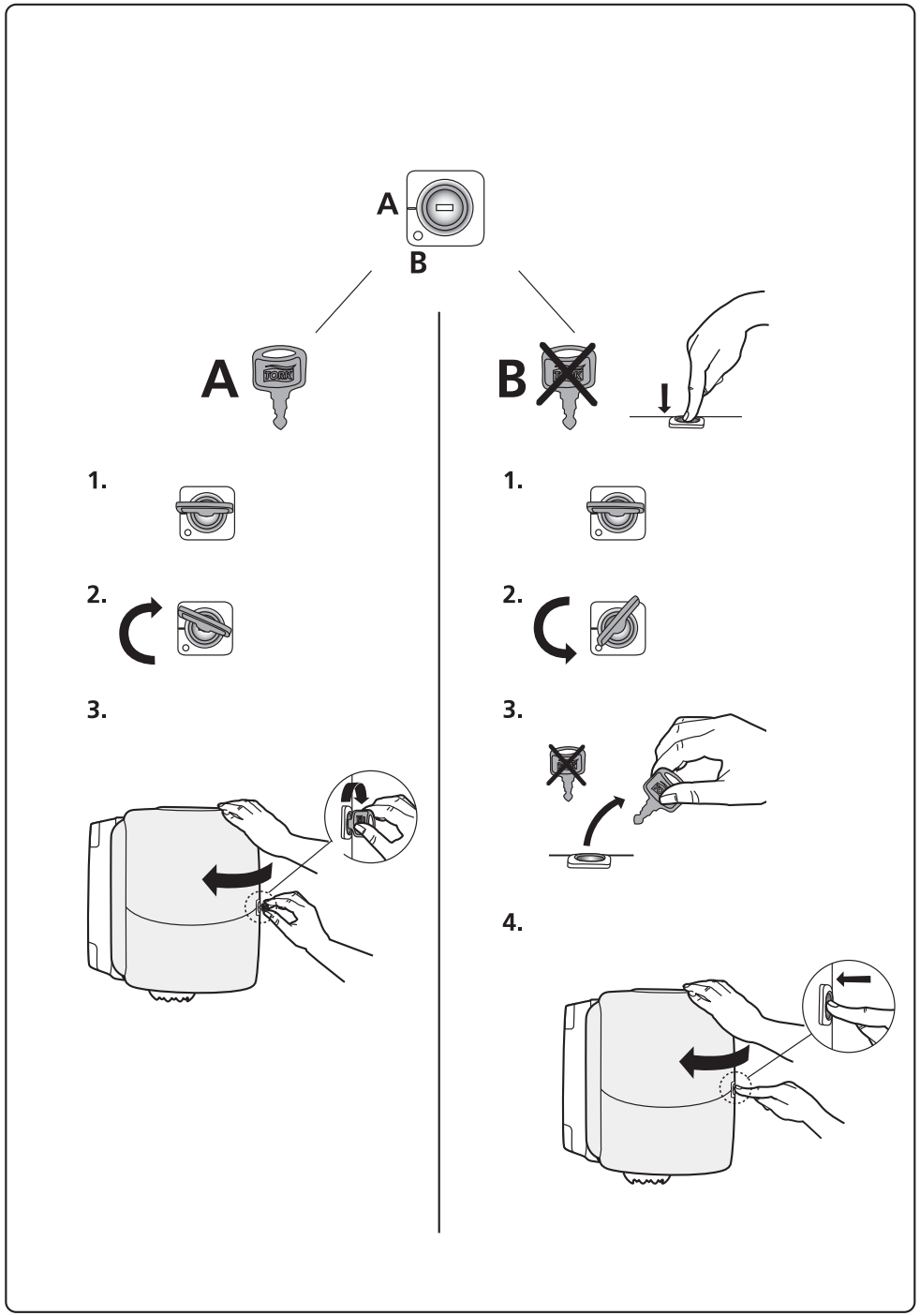
A
B
A
B
1.
2.
3.
1.
2.
3.
4.

3.

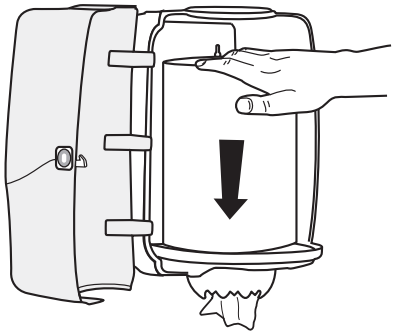

4.

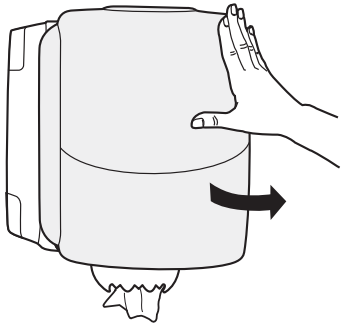

5.

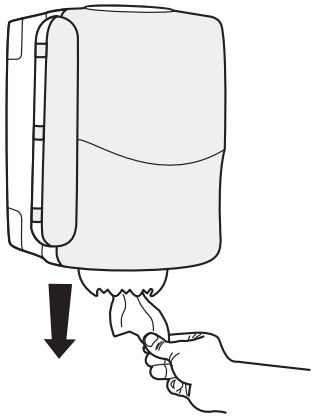

1.

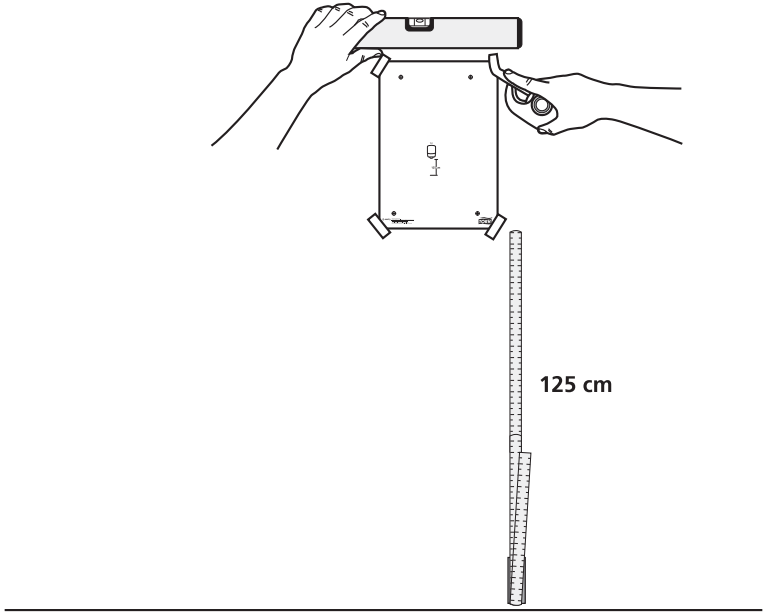

2.

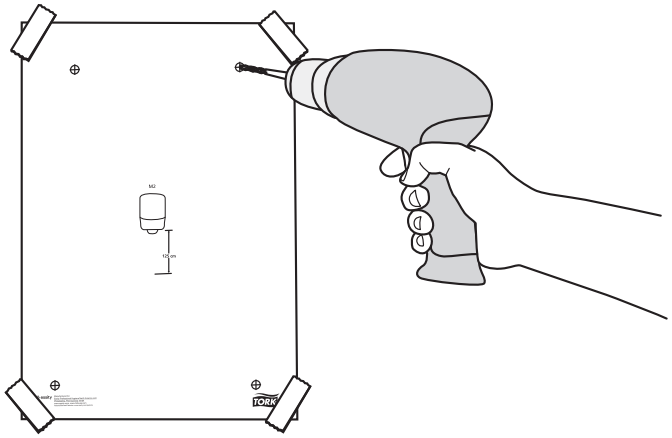

3.

x4

x4

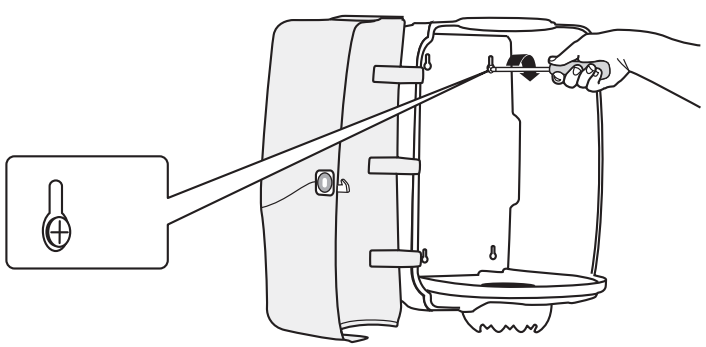

4.

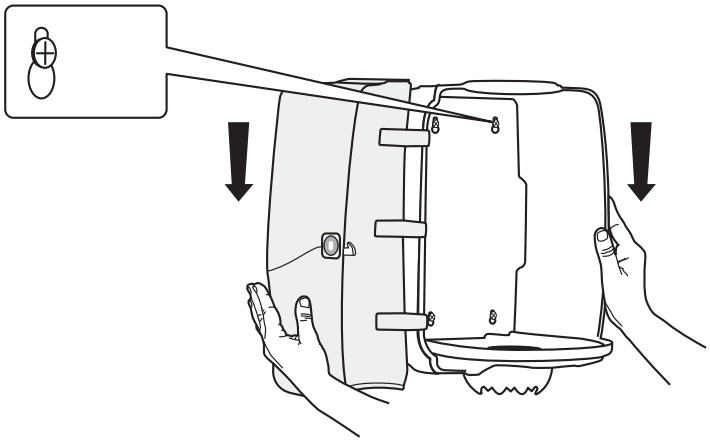

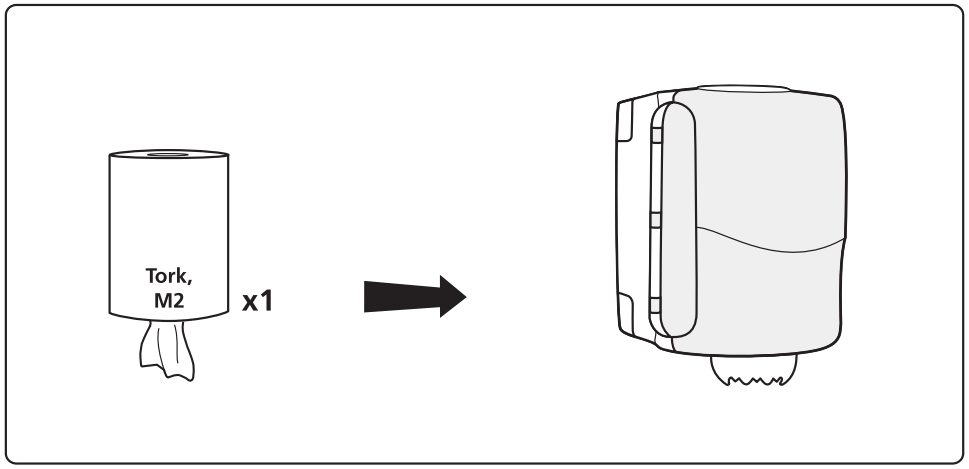

1.

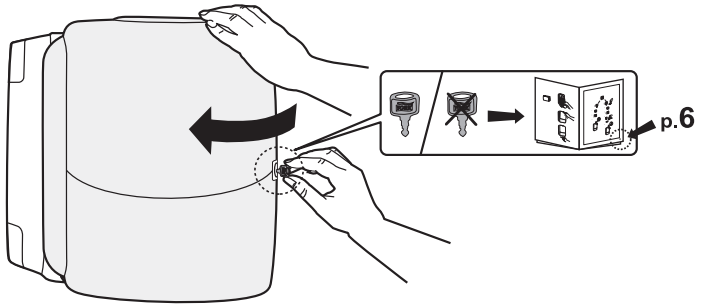

2.

