PN Series
Alternate & Momentary Action Pushbutton Switches

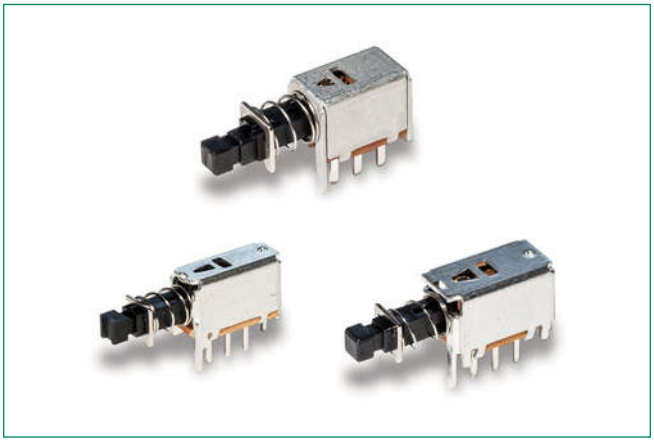

Description

The PN series alternate and momentary action pushbutton switches are used in computing, instrumentation, and measurement equipment for non-power, on-off switching. With a low-cost, reliable contact design, the high-performance PN switches are available in either momentary or locking action options – and with different actuation forces, giving end-users a customized feel.

Features & Benefits

- Momentary or locking action
- Different actuation forces for customized feel
- Low cost, reliable contact design
- Single and double pole options
- RoHS compliant

Specifications

Contact Rating	0.2 amp @ 30 V DC max.
Electrical Life	10,000 make-and-break cycles at full load.
Mechanical Life	10,000 on/off cycles.
Contact Resistance	30 mΩ max. initial
Insulation Resistance	100 MΩ min.
Dielectric Strength	500 V AC min.
Operating/Storage Temperature	–10°C to 60°C.
Packaging	Switches are supplied in anti-static trays.

Applications

- Computers and peripherals
- Instrumentation and measurement equipment
- Non-power, on-off switch applications

Materials

Frame	Tin plated steel.
Actuator	PA 66 black.
Base	Phenolic resin.
Terminals	Silver plated brass
Movable Contacts	Silver plated phosphor bronze.
Return Spring	SWC
Detent Spring/Spring Plate	Phosphor bronze
Return Spring Retainer Ring	Nickel plated steel
Terminal Seal	Epoxy

Ordering Number

To order, simply select desired option from each category and place in the appropriate box. For additional options not shown in catalog, consult Customer Service Center.

PN - xx - x - x - xx - 03 - Q - E

Function
11: SPDT Mom.
12: SPDT Locking
21: DPDT Mom.
22 DPDT Locking

Actuator[1]
S: 2.8 mm square tip
L: 3.3 mm x 3.2 mm tip

Actuator Force[2]
A: 50 g Typ
B: 100 g Typ
D: 180 g Typ
H: 250 g Typ
J: 350 g Typ

Shorting/Non-Shorting
NA: Non-shorting
SA: Shorting

Frame

Contact Material

Terminal Seal

Notes:
1. "L" actuator is available for PN 21 & PN 22 options only
2. Actuation Force "A" is available with PN11 on "S" actuator only. PN 11 & PN 21 are available with Actuation Force "B", "D", "H", "J". PN 12 & PN 22 are available with Actuation Force "D", "H", "J"

© 2024 Littelfuse, Inc.
Specifications are subject to change without notice.
Revised: CM.09/23/24

PN Series
Alternate & Momentary Action Pushbutton Switches

PN 11 SPDT Mom.
PN 12 SPDT Locking

Dimensions (mm)

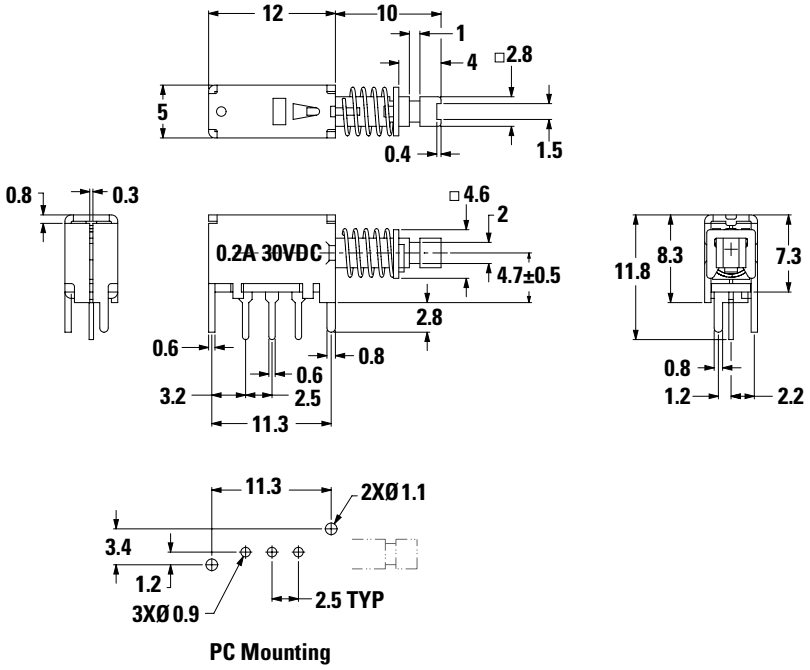

PC Mounting

PN 21 DPDT Mom. with "S" Actuator
PN 22 DPDT Locking with "S" Actuator

Dimensions (mm)

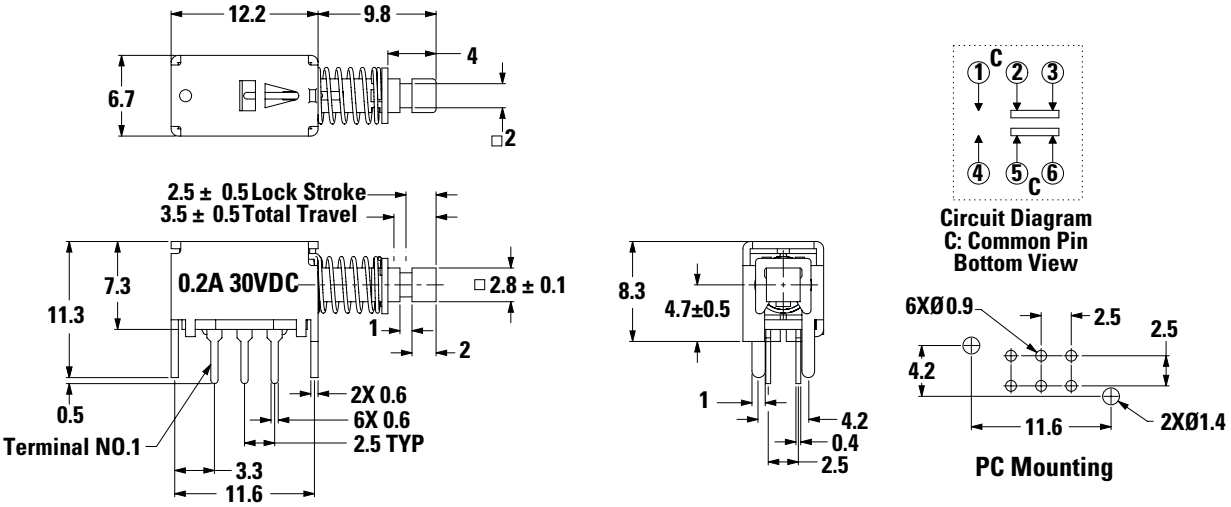

PC Mounting

© 2024 Littelfuse, Inc.
Specifications are subject to change without notice.
Revised: CM.09/23/24

PN Series
Alternate & Momentary Action Pushbutton Switches

PN 21 DPDT Mom. with "L" Actuator
PN 22 DPDT Locking with "L" Actuator

Dimensions (mm)

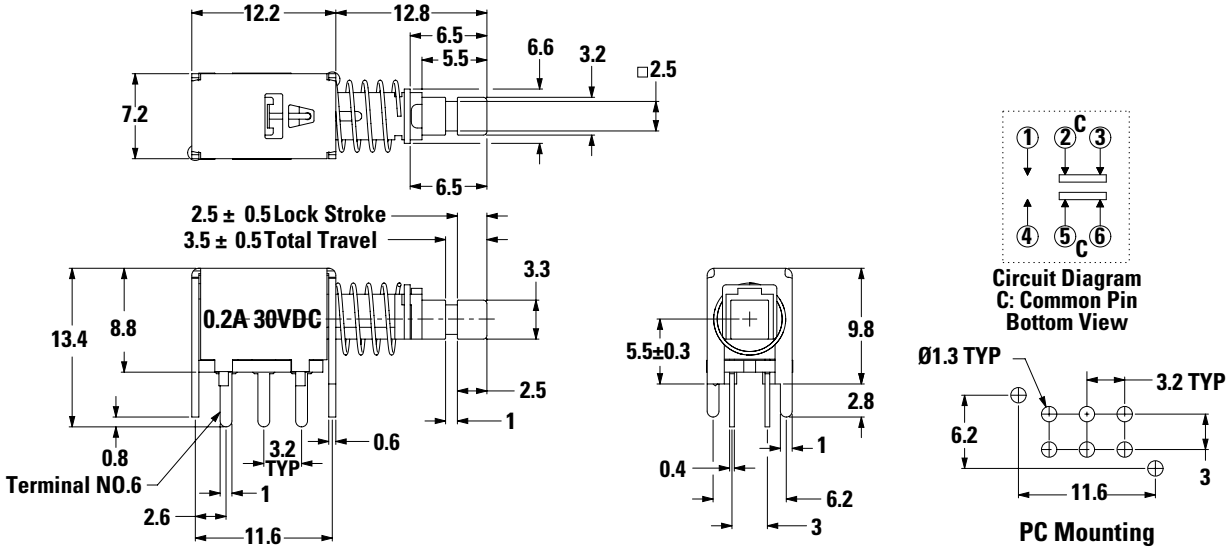

Buttons must be ordered separately. Shipped in bulk.

PE



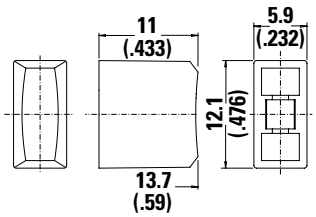

Option Code	Color
RD	Red
GY	Grey
BK	Black
WH	White

Notes: PE and PV buttons fit "L" actuators

PV



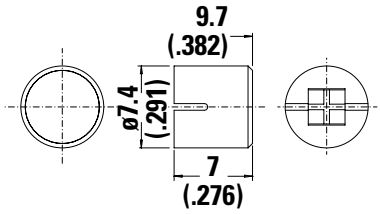

© 2024 Littelfuse, Inc.
Specifications are subject to change without notice.

PN Series
Alternate & Momentary Action Pushbutton Switches

Indexed

G001A Black
G001G Gray
G001I Ivory
G001R Red



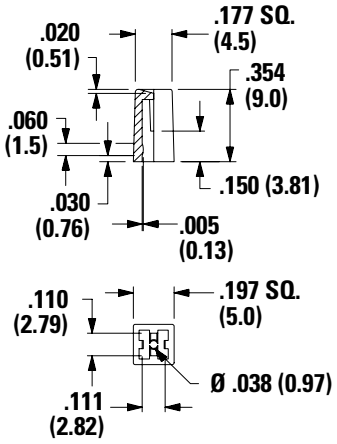

Rectangular

G002A Black
G002G Gray
G002I Ivory
G002R Red



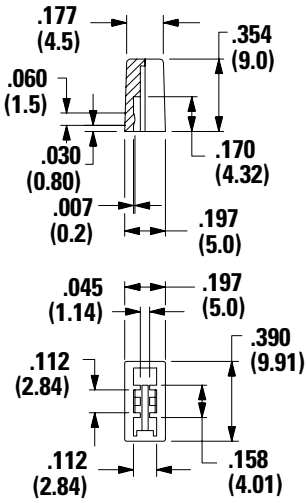

Round

G003A Black
G003G Gray
G003I Ivory
G003R Red



G001, G002, G003 and G004 buttons fit "S" actuators

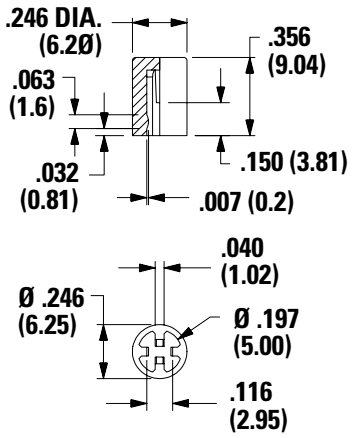

Square

G004A Black
G004G Gray
G004I Ivory
G004R Red

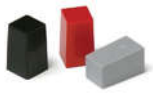

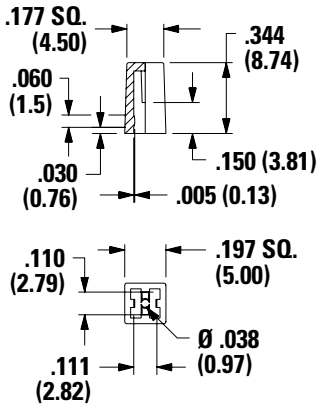

Disclaimer Notice - Information furnished is believed to be accurate and reliable. However, users should independently evaluate the suitability of and test each product selected for their own applications. Littelfuse products are not designed for, and may not be used in, all applications. Read complete Disclaimer Notice at http://www.littelfuse.com/disclaimer-electronics.

© 2024 Littelfuse, Inc.
Specifications are subject to change without notice.
Revised: CM.09/23/24