O8H208

Diffuse reflection sensor with background suppression

O8H-HPKG/IO-Link/0,30M/AS/3P

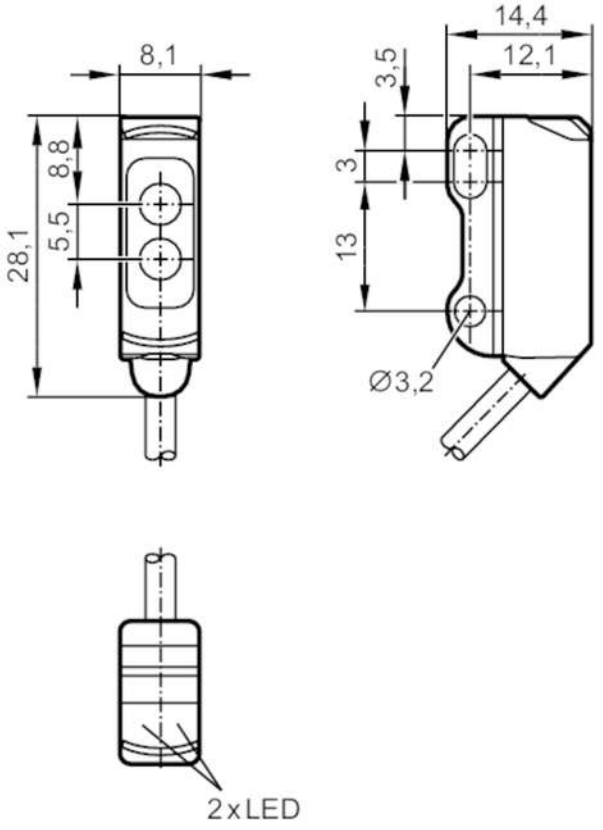

receiver in upper lens
transmitter in lower lens

IO-Link

Application		
Function principle		Diffuse reflection sensor
Electrical data		
Operating voltage	[V]	10...30 DC
Current consumption	[mA]	20; ((24 V))
Protection class		III
Reverse polarity protection		yes
Type of light		red light
Wave length	[nm]	633

O8H208

Diffuse reflection sensor with background suppression

O8H-HPKG/IO-Link/0,30M/AS/3P

Outputs		
Output function		light-on mode
Max. voltage drop switching output DC	[V]	2.5
Permanent current rating of switching output DC	[mA]	100
Switching frequency DC	[Hz]	1000
Electrical design		PNP
Short-circuit protection		yes
Type of short-circuit protection		pulsed
Range		
Range	[mm]	1...30; (white paper 200 x 200 mm)
Range on white object (90 % remission)	[mm]	1...30
Range on grey object (18 % remission)	[mm]	5...30
Range on black object (6 % remission)	[mm]	5...29
Range adjustable		yes
Max. light spot diameter	[mm]	4
Light spot dimensions refer to		at maximum range
Monitoring range final value	[mm]	10...80
Background suppression available		yes
Interfaces		
Communication interface		IO-Link
Transmission type		COM2 (38.4 kBaud)
IO-Link revision		1.1
SDCI standard		IEC 61131-9
IO-Link device ID		535 d / 00 02 17 h
Profiles		Smart Sensor: Device Identification; Device Diagnosis; Teach Channel; Binary Data Channel
SIO mode		yes
Required master port type		A
Operating conditions		
Ambient temperature	[°C]	-25...60
Protection		IP 65; IP 67
Tests / approvals		
EMC		EN 60947-5-2
Mechanical data		
Weight	[g]	23
Housing		rectangular
Dimensions	[mm]	28.1 x 8.1 x 14.4
Materials		housing: ABS; stainless steel (1.4404 / 316L)
Lens material		PMMA

O8H208

Diffuse reflection sensor with background suppression

O8H-HPKG/IO-Link/0,30M/AS/3P

Displays / operating elements		
Display	switching status	1 x LED, yellow
	operation	1 x LED, green

Remarks	
Pack quantity	1 pcs.

Electrical connection

Cable: 0.3 m, PVC; 3 x 0.08 mm²

Connector: 1 x M8



Connection

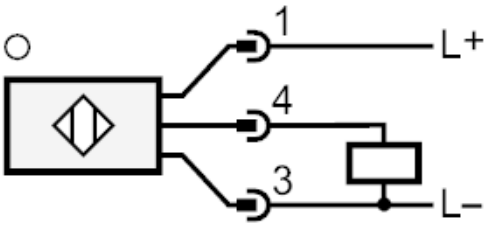

O8H208

Diffuse reflection sensor with background suppression

O8H-HPKG/IO-Link/0,30M/AS/3P

diagrams and graphs

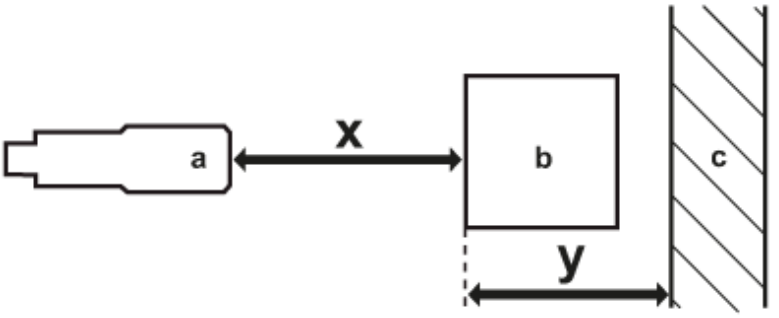

a: sensor

b: object

c: background

x: distance sensor/object [mm]

y: min. distance object/background [mm]

accuracy graph

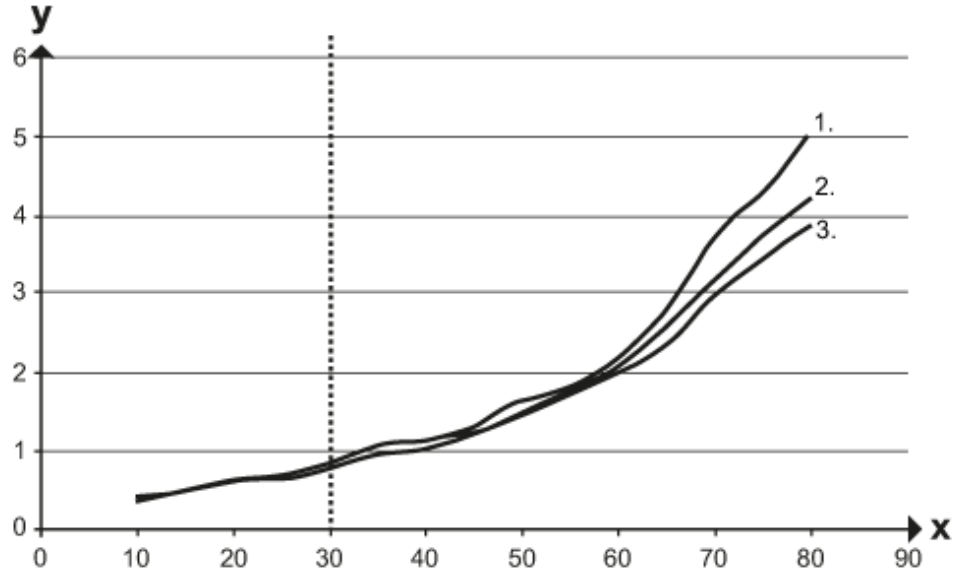

x: distance sensor/object [mm]

y: min. distance object/background [mm]

1 = object black (6 % remission) , background (white 90 % remission)

2 = object grey (18 % remission) , background (white 90 % remission)

3 = object white (90 % remission) , background (white 90 % remission)