20817-622 INSERTER/EXTRACTOR HANDLE TYPE IEL, GREY LEVER, BLACK BUTTON, TOP, 10 PIECES

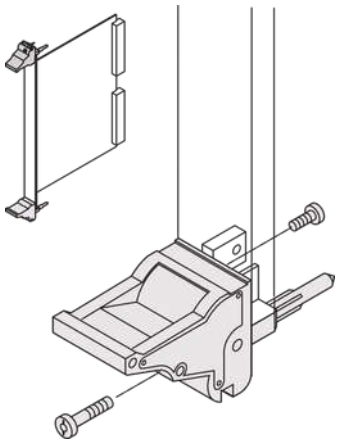

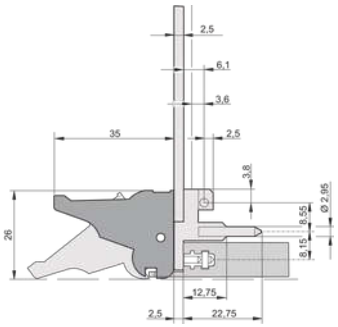

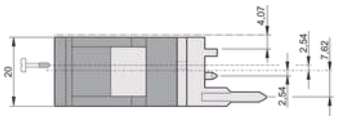

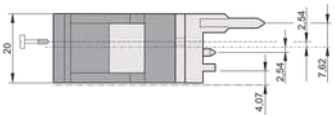

KEY FEATURES

- Suitable for insertion and extraction forces up to 700 N (per pair)
- In accordance with IEEE 1101.10 and IEC 60297-3-102
- A microswitch can be mounted

PRODUCT ATTRIBUTES

- Product Type: Handle
- Type: Inserter/Extractor, Standard
- Works With: Front Panels
- Handle Type: IEL
- Material: Polycarbonate
- Color: Grey
- Flammability Rating: UL® 94V-0
- Complies With: EN 45545-2
- Package Quantity: 10

ADDITIONAL PRODUCT DETAILS

The inserter/extractor handle, type IEL in accordance with IEEE 1101.10. Two of these handles can overcome a single lever force of 700 N (per pair).

Please order Coding pegs and Microswitch separately.

CERTIFICATIONS





North America
All locations
+1.763.422.2661
Chat with us:
schroff.nvent.com

Europe
Straubenhardt, Germany
+49.7082.794.0
Betschdorf, France
+33.3.88.90.64.90
Warsaw, Poland
+48.22.209.98.35
Assago, Italy
+39.02.932.7141
Chat with us:
schroff.nvent.com

Asia
Shanghai, China
+86.21.2412.6943
Qingdao, China
+86.532.8771.6101
Singapore
+65.6768.5800
Shin-Yokohama, Japan
+81.45.476.0271
Chat with us:
schroff.nvent.com

Middle East & India
Dubai, United Arab Emirates
+971.4.378.1700
Bangalore, India
+91.80.6715.2001
Istanbul, Turkey
+90.216.250.7374
Chat with us:
schroff.nvent.com

nVent

Our powerful portfolio of brands:
nVent.com CADDY ERICO HOFFMAN RAYCHEM SCHROFF TRACER

© 2023 nVent. All nVent marks and logos are owned or licensed by nVent Services GmbH or its affiliates. All other trademarks are the property of their respective owners.

nVent reserves the right to change specifications without notice.