Brand of NTN corporation

Technical data

UCPG208

Bearing units



Grey cast housing, radial insert ball bearing with socket set screws,seal with slinger

KIT CONTENT

UC.208.G2, PG208

VISUAL (S)

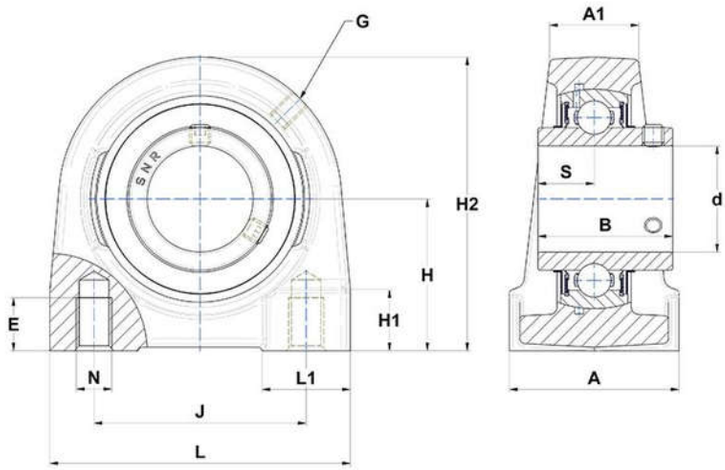

PRODUCT DEFINITION

Brand	SNR
A - Housing width	54 mm
A1 - Housing top width	30 mm
B - Width of Inner Ring	49,2 mm
d - Shaft diameter	40 mm
E - Mounting hole thread depth	22 mm

NTN Europe
1 rue des Usines · BP 2017 · 74010 Annecy Cedex · France · Tel. +33 (0)4 50 65 30 00
S.A. au capital de 322 639 919 € · RCS ANNECY B 325 821 072 · Id. Fiscale : FR 48 325 821 072
SIRET 325 821 072 00015 · Code APE 2815 Z · Code NACE 28.15

PRODUCT DEFINITION	
G - Grease fitting	M6x1
H - Distance mounting base to centerline spheric. seating diam.	49,2 mm
H1 - Housing foot height	20 mm
H2 - Housing height	98 mm
J - Mounting holes distance	78 mm
L - Housing length	110 mm
L1 - Housing foot length	35 mm
N - Mounting hole dimension	M12
S - Distance front side/bearing centre	19 mm

PRODUCT PERFORMANCE	
C - Dynamic load rating	29600000 mN
C0 - Static load rating	18200000 mN
Operating temperature min.	253,15 °K
Operating temperature max.	373,15 °K

OTHER FEATURES	
Mass	1,84 kg
Recommended tightening torque for set screw	11.5 N-m