Draw wire mechanics with encoder or analog sensor

Draw wire encoder B80

Measuring length max. 3 m
Traverse speed max. 10 m/s



The draw wire mechanics B80 can be used up to a measuring length of 3 meters.

These draw wire mechanics may be combined with the proven Kübler Sendix encoders with incremental or absolute interface, as well as with analog sensors.

SSI · PROFIBUS · PROFINET · EtherCAT Conformance tested · RoHS · Analog output · CANopen · EtherNet/IP



Max. acceleration · Long service life · Wide temperaturerange · High protection level · Reverse polarity protection

Robust

- The titanium-anodized aluminum housing and the stainless steel wires allow for using the mechanics even in harsh conditions.
- Wear-free wire exit thanks to special plain bearing guide.
- Various wire types and wire fastenings.

Versatile

- High traverse speed, up to 10 m/s.
- High acceleration, up to 140 m/s².
- Quick fastening by means of 2 screws.
- Various connection possibilities available.
- Interchangeable encoders (Interchangeable installation).

Order code with encoder (incremental, absolute)

D8.	X (a)	B1	.	XXXX (b)	.	XX (c)	X (d)	X (e)	.	XXXX (f)

Standard variants are represented **bold underlined**

a *Mechanics*
2 = interchangeable installation [1]
4 = fixed installation [2]

b *Measuring range*
0100 = 1000 mm
0200 = 2000 mm
0300 = 3000 mm

c *Encoder used*
00 = Sendix 5000, incremental
M3 = Sendix M5863, absolute
F3 = Sendix F5863, absolute
63 = Sendix 5863, absolute
M8 = Sendix M5868, absolute
F8 = Sendix F5868 absolute
68 = Sendix 5868, absolute

d *Output circuit*
depends on the encoder used

e *Type of connection*
depends on the encoder used

f *Resolution / Protocol / Options*
depends on the encoder used

Optional on request
- Other measuring ranges
- Cable diameter 1 mm
- Eyelet or M4 wire fastening instead of wire clip
- Modified cable and/or connector orientation
- Modified cable outlet direction
- Sensor protection level IP67
- Improved linearity (0.02 %)

Standard resolutions for draw wire with incremental encoder Sendix 5000			
Drum circumference [mm]	200	200	200
Pulses / revolution [ppr]	200	2000	4000
Pulses / mm	1	10	20
Resolution [mm]	1	0.1	0.05

Standard resolutions for draw wire with absolute encoder Sendix M5863 (12 bit ST) or M5868 (12 bit ST, programmable via bus)	
Drum circumference [mm]	200
Pulses / revolution [ppr]	4096
Pulses / mm	20.5
Resolution [mm]	0.05

1) Draw wire mechanics with standard flange. The encoder can be replaced by the customer.
2) The encoder can only be replaced at the factory.

© Fritz Kübler GmbH, subject to errors and changes. 11/2017

Draw wire mechanics with encoder or analog sensor

Draw wire encoder B80

Measuring length max. 3 m
Traverse speed max. 10 m/s

Recommended standard variants (with incremental, absolute encoder)

Order no. draw wire encoder	Mounted encoder	Interface	Power supply	Type of connection	Resolution / Protocol	Option
D8.xB1.xxxx.0054.2000	Sendix 5000 (8.5000.8354.2000)	Push-pull with inverted signal	10 ... 30 V DC	radial M12 connector	2000 ppr	-
D8.xB1.xxxx.M324.G222	Sendix M5863 (8.M5863.3524.G222)	SSI	10 ... 30 V DC	radial M12 connector	4096 ppr / SSI-Gray-Code	-
D8.xB1.xxxx.M824.2122	Sendix M5868 (8.M5868.3524.2122)	CANopen	10 ... 30 V DC	radial M12 connector	CANopen encoder profile DS406 V4.0	-

Other variants (with absolute encoder)

Order no. draw wire encoder	Mounted encoder	Interface	Power supply	Type of connection	Resolution / Protocol	Option
D8.xB1.xxxx.F326.G223	Sendix F5863 (8.F5863.1226.G223)	SSI	10 ... 30 V DC	1 x radial M12 connector	4096 ppr / SSI-Gray-Code	SET button + status LED
D8.xB1.xxxx.6326.G223	Sendix 5863 (8.5863.1226.G223)	SSI	10 ... 30 V DC	1 x radial M12 connector	4096 ppr / SSI-Gray-Code	SET button + status LED
D8.xB1.xxxx.F82E.2123	Sendix F5868 (8.F5868.122E.2123)	CANopen	10 ... 30 V DC	1 x radial M12 connector	CANopen encoder profile DS406 V3.2	SET button
D8.xB1.xxxx.6822.2123	Sendix 5868 (8.5868.1222.2123)	CANopen	10 ... 30 V DC	2 x radial M12 connector	CANopen encoder profile DS406 V3.2	SET button
D8.xB1.xxxx.6832.3113	Sendix 5868 (8.5868.1232.3113)	PROFIBUS	10 ... 30 V DC	3 x radial M12 connector	Profibus-DP V0 encoder profile Class 2	SET button
D8.xB1.xxxx.68B2.B212	Sendix 5868 (8.5868.12B2.B212)	EtherCAT	10 ... 30 V DC	3 x radial M12 connector	EtherCAT with CoE 3.2.10	-
D8.xB1.xxxx.68C2.C212	Sendix 5868 (8.5868.12C2.C212)	PROFINET IO	10 ... 30 V DC	3 x radial M12 connector	PROFINET encoder profile version 4.1	-
D8.xB1.xxxx.F8AN.A222	Sendix F5868 (8.F5868.12AN.A222)	EtherNet/IP	10 ... 30 V DC	3 x axial M12 connector	EtherNet/IP	-

Order code with encoder (analog, scalable with limit switch function)

D8.	X (a)	B1	.	XXXX (b)	.	M1 (c)	X (d)	X (e)	.	XXXX (f)

Standard variants are represented **bold underlined**

a *Mechanics*
2 = interchangeable installation [1]
4 = fixed installation [2]

b *Measuring range*
0100 = 1000 mm
0200 = 2000 mm
0300 = 3000 mm

c *Encoder used*
M1 = Sendix M5861, absolute [3]

d *Output circuit*
depends on the encoder used

e *Type of connection*
depends on the encoder used

f *Resolution / Protocol / Options*
depends on the encoder used

Optional on request
- Other measuring ranges
- Cable diameter 1 mm
- Eyelet or M4 wire fastening instead of wire clip
- Modified cable and/or connector orientation
- Modified cable outlet direction
- Sensor protection level IP67

Recommended standard variants (with encoder analog, scalable with limit switch function)

Order no. draw wire encoder	Mounted encoder	Interface	Power supply	Type of connection	Resolution / Protocol	Option
D8.xB1.xxxx.M134.3612	Sendix M5861 (8.M5861.3534.3612)	Analog, 4 ... 20 mA	10 ... 30 V DC	radial M12 connector	12 Bit / 4 ... 20 mA	scalable without limit switch function [4]
D8.xB1.xxxx.M144.4612	Sendix M5861 (8.M5861.3544.4612)	Analog, 0 ... 10 V	15 ... 30 V DC	radial M12 connector	12 Bit / 0 ... 10 V	scalable without limit switch function [4]
D8.xB1.xxxx.M134.3512	Sendix M5861 (8.M5861.3534.3512)	Analog, 4 ... 20 mA	10 ... 30 V DC	radial M12 connector	12 Bit / 4 ... 20 mA	scalable with limit switch function [5]
D8.xB1.xxxx.M144.4512	Sendix M5861 (8.M5861.3544.4512)	Analog, 0 ... 10 V	15 ... 30 V DC	radial M12 connector	12 Bit / 0 ... 10 V	scalable with limit switch function [5]

Order code with analog sensor (scaled to measuring range)

D8.3B1 (Type)	.	XXXX (a)	.	XXX (b)	X (c)	.	0000

a *Measuring range*
0100 = 1000 mm
0200 = 2000 mm
0300 = 3000 mm

b *Analog sensor output / power supply*
A11 = 4 ... 20 mA / 12 ... 30 V DC
A22 = 0 ... 10 V / 12 ... 30 V DC
A33 = potentiometer 1 kΩ / max. 30 V DC

c *Type of connection*
1 = axial cable, 2 m PVC
3 = axial M12 connector, 4-pin

Optional on request
- Other measuring ranges
- Cable diameter 1 mm
- Eyelet or M4 wire fastening instead of wire clip
- Modified cable and/or connector orientation
- Modified cable outlet direction
- Sensor protection level IP67
- Improved linearity (0.02 %)
- Increased temperature range -40°C ... +85°C and -20°C ... +120°C

1) Draw wire mechanics with standard flange. The encoder can be replaced by the customer.
2) The encoder can only be replaced at the factory.
3) With ccw option.
4) Delivery condition: scaled to measuring range.
Description for scaling and limit switch function see data sheet M5861.
5) Delivery condition: unscaled.
Description for scaling and limit switch function see data sheet M3661.

© Fritz Kübler GmbH, subject to errors and changes. 11/2017

Draw wire mechanics with encoder or analog sensor

Draw wire encoder B80

Measuring length max. 3 m
Traverse speed max. 10 m/s

Accessories for draw wire encoder

Dimensions in mm [inch]

Order no.

Guide pulley



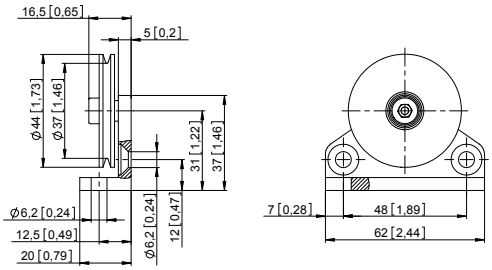

Technical data:
- mounting bracket (anodized alum.)
- guide pulley (plastic POM)
- ball bearing (type 696-2R5)

Scope of delivery:
- 2 x countersunk screws for lateral fixing
- 2 x hexagonal screws for fixing on a flat surface

8.0000.7000.0045

Connection technology for analog sensor

Order no.

Cordset, pre-assembled	M12 female connector with coupling nut, 5-pin 2 m [6.56'] PVC cable	**05.00.6081.2211.002M**
Connector, self-assembly (straight)	M12 female connector with coupling nut, 5-pin	**8.0000.5116.0000**

Technical data

Mechanical characteristics (draw wire mechanics)

Measuring range		1000 mm	2000 mm	3000 mm
Extension force	F_{min}	6.9 N	6.4 N	6.9 N
	F_{max}	8.3 N	7.8 N	9.8 N
Max. speed		10 m/s	10 m/s	10 m/s
Max. acceleration		140 m/s²	140 m/s²	140 m/s²
Linearity (of the measuring range)				
with analog sensor		±0.15 %	±0.1 %	±0.1 %
with encoder		±0.05 %	±0.05 %	±0.05 %
		±0.02 % [1]	±0.02 % [1]	±0.02 % [1]
Weight		approx. 750 g [26.45 oz] (dep. on the sensor/encoder used)		
Material	housing	titanium-anodized aluminum		
	wire	stainless steel ø 0.5 mm ø 1 mm can be supplied as a special up to measuring range 1500 mm (other wire types on request)		
Protection acc. to EN 60529		IP65 (sensor)		

Electrical characteristics (digital output)

The electrical characteristics of the draw wire mechanics with digital output can be found in the data sheets of the encoders.

Operating principle

Construction
The core of a draw wire device is a drum mounted on bearings, onto which a wire is wound. Winding takes place via a spring-loaded device.

Note
Exceeding the maximum extension length of the draw wire will lead to damage to the wire and the mechanics.

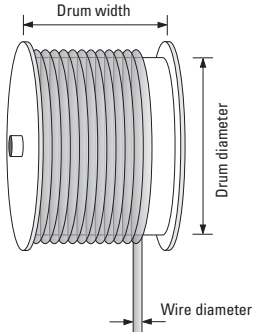

Electrical characteristics (analog sensor, scaled to measuring range)

Version	A22	A11	A33
Analog output	0 ... 10 V	4 ... 20 mA	potentiometer
Output	0 ... 10 V / galv. isolated, 4 conductors	4 ... 20 mA / 2 conductors	1 kΩ
Power supply	12 ... 30 V DC	12 ... 30 V DC	max. 30 V DC
Recommended slider current	–	–	< 1 µA
Max. current consumption	22.5 mA (no load)	50 mA	–
Reverse polarity protection	yes	yes	–
Working temperature	-20°C ... +85°C [-40°F ... +185°] -40°C ... +85°C [-40°F ... +185°F] [2]	-20°C ... +85°C [-40°F ... +185°] -40°C ... +85°C [-40°F ... +185°F] [2]	-20°C ... +85°C [-40°F ... +185°] -40°C ... +85°C [-40°F ... +185°F] [2] -20°C ... +120°C [-4°F ... +248°F] [2]
Connection diagrams	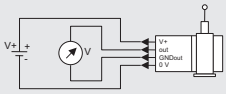	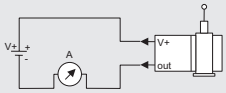	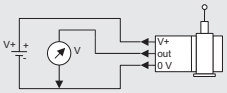
CE compliant acc. to	EMC guideline 2014/30/EU RoHS guideline 2011/65/EU		

1) On request for encoder version: **00, F3, 63, F8, 68** (see order code C).

2) Optional on request.

© Fritz Kübler GmbH, subject to errors and changes. 11/2017

Draw wire mechanics with encoder or analog sensor | **Draw wire encoder B80** | **Measuring length max. 3 m**
Traverse speed max. 10 m/s

Technology in detail

Various wire types and wire fastenings

Wire types:
- 0.5 mm (V2A) [1)]
- 0.51 mm (V4A)
- 1.0 mm plastic-coated (V4A = 0.81 mm, plastic 0.19 mm)
- 0.6 mm (Coramid)

Wire fastenings:
Clip [1)] M4 thread Eyelet



Individual wire outlet and cable / connector orientation

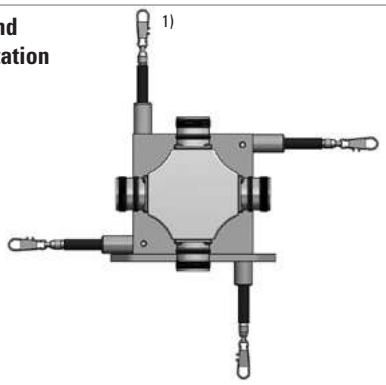

Extension wire



Application-specific installation possibilities

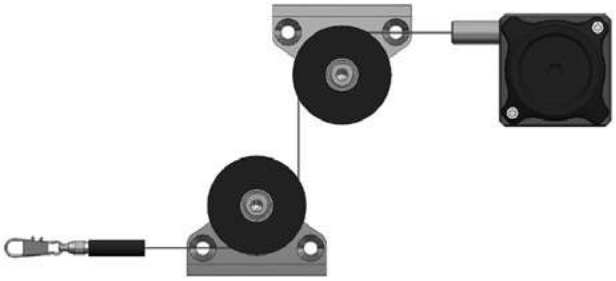

1) Standard.

© Fritz Kübler GmbH, subject to errors and changes. 11/2017

Draw wire mechanics with encoder or analog sensor | **Draw wire encoder B80** | **Measuring length max. 3 m, Traverse speed max. 10 m/s**

Dimensions

Dimensions in mm [inch]

Draw wire mechanics with encoder Fixed installation

Dimension D depends on the measuring range of the draw wire	
Measuring range	**D**
1000 mm	21 [0.83]
2000 mm	21 [0.83]
3000 mm	35 [1.38]

Dimension B depends on the encoder used	
Encoder	**B**
Sendix incremental (5000) D8.4B1.xxxx.00xx.xxxx	55.75 [2.19]
Sendix absolute (F5863) D8.4B1.xxxx.F3xx.xxxx	68.25 [2.69]
Sendix absolute (5863) D8.4B1.xxxx.63xx.xxxx	68.25 [2.69]
Sendix absolute (F5868, CANopen) D8.4B1.xxxx.F8xx.21xx	88.25 [3.47]
Sendix absolute (F5868, EtherNet/IP) D8.4B1.xxxx.F8xx.A2xx	76.75 [3.02]
Sendix absolute (5868) D8.4B1.xxxx.68xx.xxxx	95.35 [3.75]
Sendix absolute (M586x) D8.4B1.xxxx.Mxxx.xxxx	68.45 [2.69]

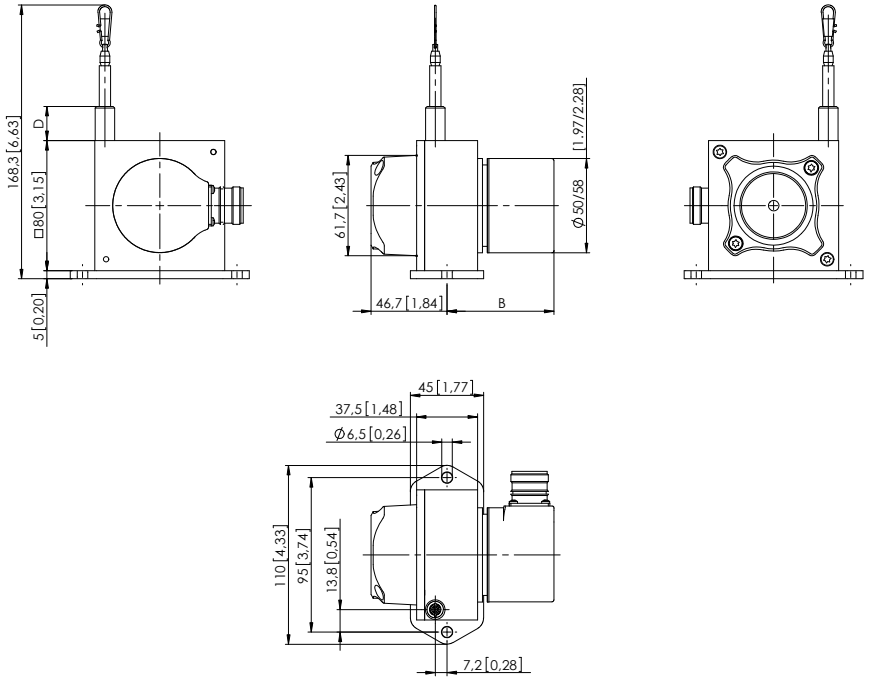

Draw wire mechanics with encoder Interchangeable installation, clamping flange

Dimension D depends on the measuring range of the draw wire	
Measuring range	**D**
1000 mm	21 [0.83]
2000 mm	21 [0.83]
3000 mm	35 [1.38]

Dimension B depends on the encoder used	
Encoder	**B**
Sendix incremental (5000) D8.2B1.xxxx.00xx.xxxx	78.75 [3.10]
Sendix absolute (F5863) D8.2B1.xxxx.F3xx.xxxx	91.25 [3.59]
Sendix absolute (5863) D8.2B1.xxxx.63xx.xxxx	91.25 [3.59]
Sendix absolute (F5868, CANopen) D8.2B1.xxxx.F8xx.21xx	111.25 [4.40]
Sendix absolute (F5868, EtherNet/IP) D8.2B1.xxxx.F8xx.A2xx	99.75 [3.93]
Sendix absolute (5868) D8.2B1.xxxx.68xx.xxxx	118.35 [4.66]
Sendix absolute (M586x) D8.2B1.xxxx.Mxxx.xxxx	91.45 [3.60]

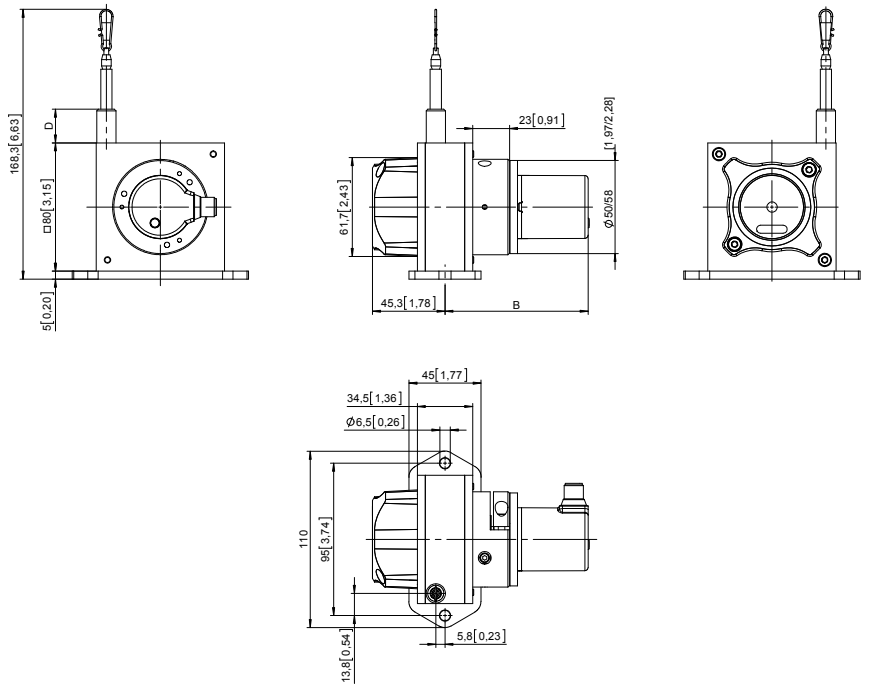

© Fritz Kübler GmbH, subject to errors and changes. 11/2017

Draw wire mechanics with encoder or analog sensor | **Draw wire encoder B80** | **Measuring length max. 3 m, Traverse speed max. 10 m/s**

Dimensions

Dimensions in mm [inch]

Draw wire mechanics with analog sensor (scaled on measuring range)

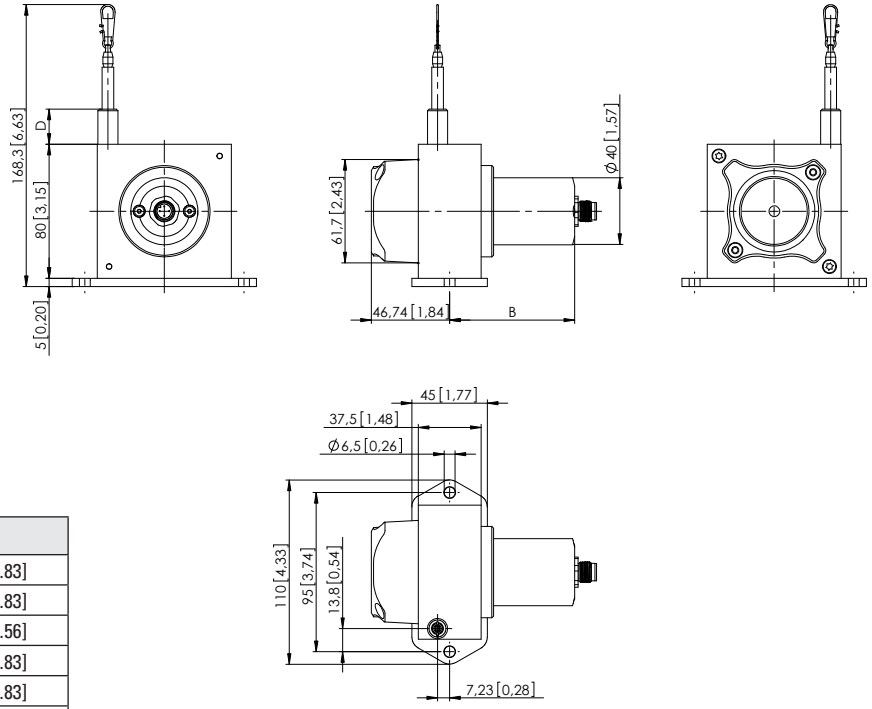

Sensor type	Measuring length	B	D
Potentiometer	1000 mm	74 [2.91]	21 [0.83]
	2000 mm	74 [2.91]	21 [0.83]
	3000 mm	102.5 [4.04]	65 [2.56]
4 ... 20 mA 0 ... 10 V	1000 mm	87.5 [3.44]	21 [0.83]
	2000 mm	87.5 [3.44]	21 [0.83]
	3000 mm	102.3 [4.03]	78.5 [3.09]

Terminal assignment (analog sensor A11, A22, A33)

Pin	1	2	3	4
Core color	BN	WH	BU	BK
0 ... 10 V	+V	Signal	0 V	0 V Sig.
4 ... 20 mA	+V	n. c.	Signal	n. c.
1 kΩ	+V	Slider	0 V	n. c.

Top view of mating side, male contact base

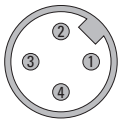

M12 connector, 4-pin

© Fritz Kübler GmbH, subject to errors and changes. 11/2017