E20717

Clamp

CLAMP KR

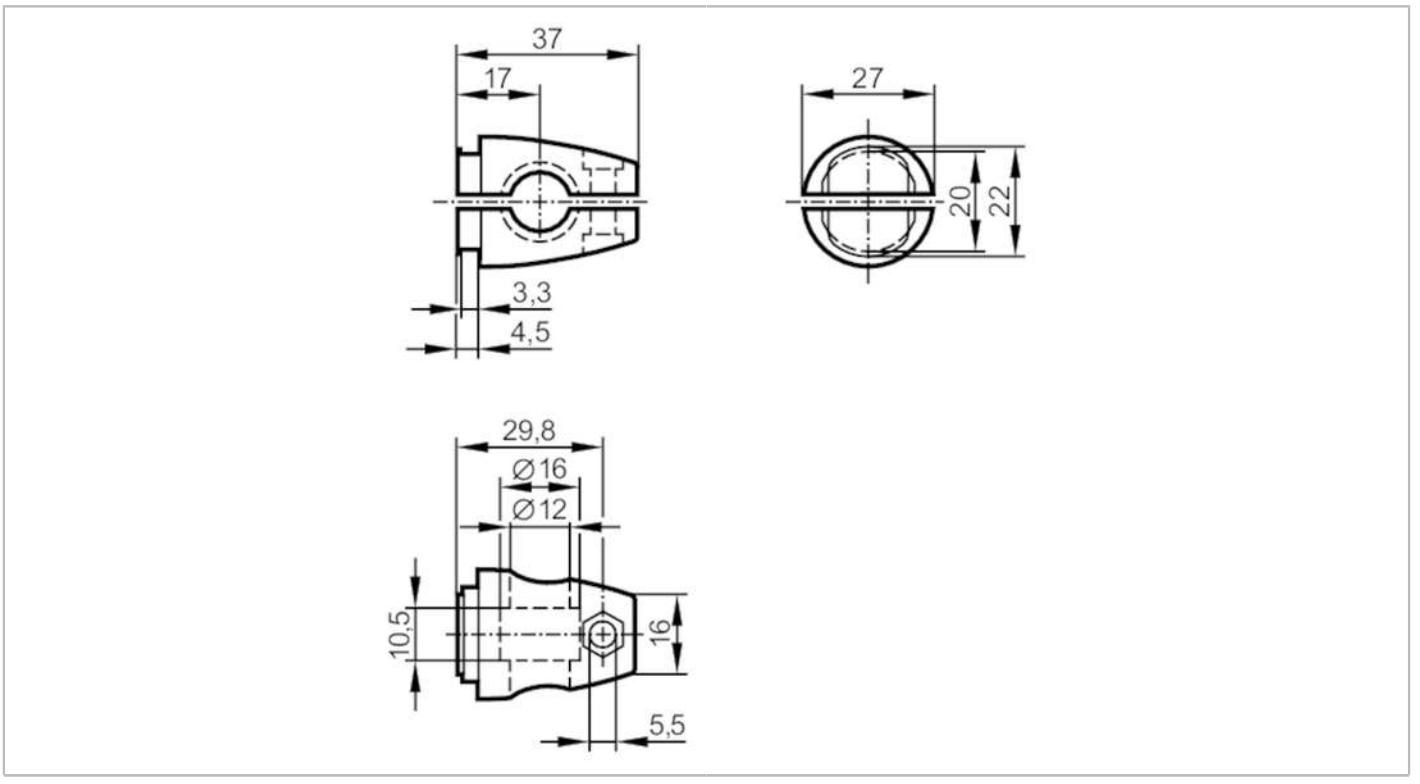

Mechanical data		
Weight	[g]	79.5
Type of mounting		Mounting rod; (Ø 12 mm)
Dimensions	[mm]	27 x 27 x 37
Materials		Clamp: diecast zinc

Remarks	
Pack quantity	1 pcs.