RGK600SA

Stand alone gen-set controller, 12/24VDC, USB/optical and Wi-Fi point programming port on front, W/Pick-up speed input, IP54



Product designation			Stand alone gen-set controllers
Product type designation			RGK600SA
Power supply			
Rated battery voltage		V	12/24VDC
Digital inputs			
Digital input type			4 neg.+ 1 pos.
"W"/AC/PICK-UP speed inputs			
"W"/AC/PICK-UP speed input type			"W" or generator frequency or "Pick-up"
Voltage inputs			
Rated voltage (Ue)		VAC	100…480
Measurement range		V	100…480
Frequency range		Hz	45…65
Measurement method			TRMS
Current inputs			
Rated current (Ie)		A	5A/1A
Measurement range			0.05…6A or 0.05…1.2A
Amperometric inputs type			3PH, /5A or /1A
Measurement method			TRMS
Static Outputs			
Static output type			6 (SSR)
Ambient conditions			
Temperature			
Operating temperature			
	min	°C	-30
	max	°C	+70
Protection degree			IP40, IP65 with optinal gasket seal
Dimensions			

The characteristics described in this document are subject to updates or modifications at any time. The descriptions, technical and functional information, illustrations and instructions in this brochure are purely illustrative, and are consequently not contractually binding

RGK600SA

Stand alone gen-set controller, 12/24VDC, USB/optical and Wi-Fi point programming port on front, W/Pick-up speed input, IP54

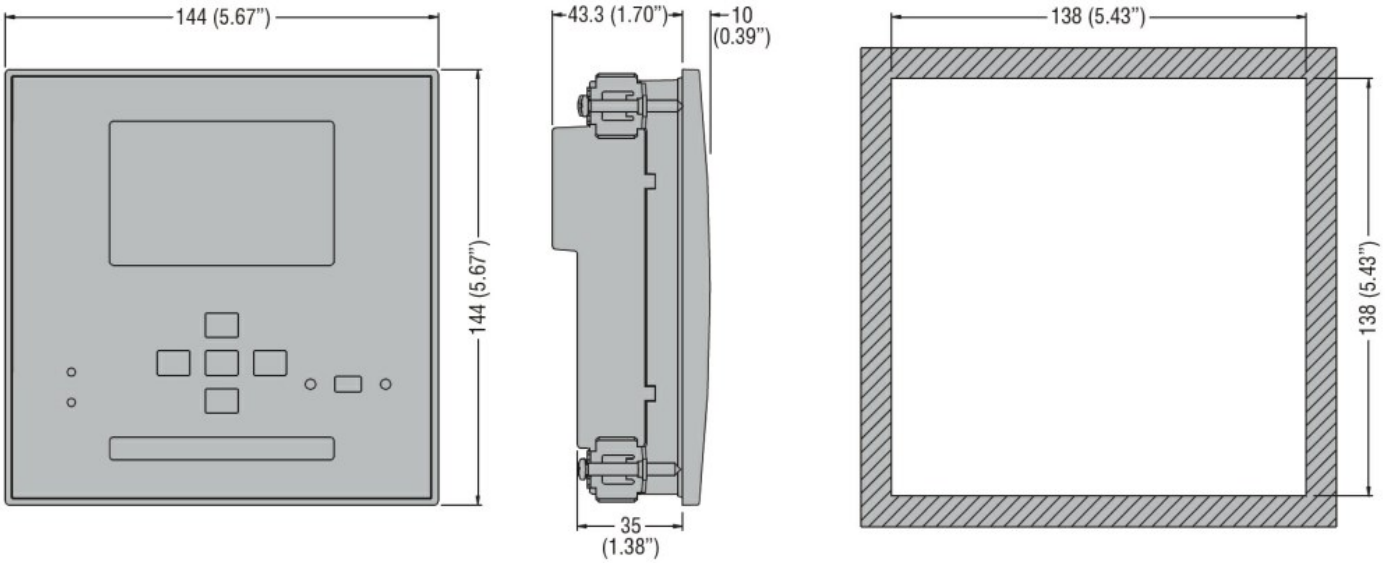

Wiring diagrams

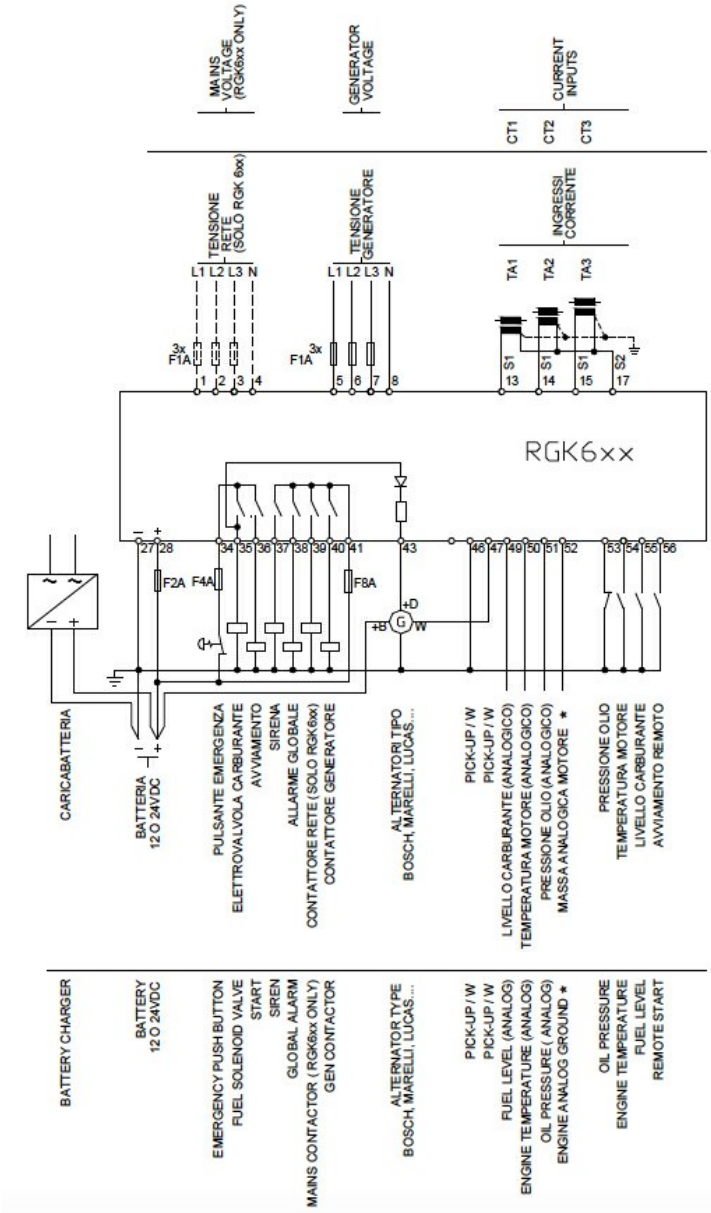

Certifications and compliance

The characteristics described in this document are subject to updates or modifications at any time. The descriptions, technical and functional information, illustrations and instructions in this brochure are purely illustrative, and are consequently not contractually binding

Compliance	
	CSA C22.2 n° 14
	IEC/EN 61000-6-2
	IEC/EN 61000-6-3
	IEC/EN 61010-1
	UL 508

Certificates	
	EAC
	UL Listed for USA and Canada (cULus-File E93601)

ETIM classification

ETIM 8.0	EC002758 - Energy management controller

The characteristics described in this document are subject to updates or modifications at any time. The descriptions, technical and functional information, illustrations and instructions in this brochure are purely illustrative, and are consequently not contractually binding