Datasheet - IFL 15-30L-10TP

Inductive proximity switch / Housing construction form: cylinder, thread / IFL - M30

☒ Preferred typ



(Minor differences between the printed image and the original product may exist!)

- Design M30
- Metal enclosure
- DC 3-wire
- Long design

Ordering details

Product type description	IFL 15-30L-10TP
Article number	101127041
EAN code	4030661050829

Global Properties

Product name	IFL - M30
Standards	IEC/EN 60947-5-2; DIN VDE 0660-208
Compliance with the Directives (Y/N) CE	Yes
Operating resource protection class	None
Materials	
- Material of the housings	Brass
- Material of the nuts	Brass
- Material of the cable mantle	PVC
- Material of the active surface	Plastic
Housing coating	nickel-plated
Housing construction form	cylinder, thread
Weight	195 g

Mechanical data

Design of electrical connection	Cable

Cable length	2 m
Conductor with strain relief	Yes
Conductors	3 x 0,34 mm²
mechanical installation conditions	not flush
Switch distance	15 mm
Reduction factor 1 met (Y/N)	No
Protection circuit	inductive interference protection, Protection against polarity reversal, short-circuit and overload proof
Pressure resistant (Y/N)	No
Tightening torque for nuts	A/F 36 max. 3000 Ncm

Ambient conditions

Ambient temperature	
- Min. environmental temperature	−25 °C
- Max. environmental temperature	+70 °C
Protection class	IP67 to IEC/EN 60529

Electrical data

Design of control element	Normally open contact (NO)
Number of wire	3 piece
Voltage type	DC, direct current
Supply voltage U_B	
- Min. supply voltage	10 V
- Max. supply voltage	30 V
Switch frequency	approx. 100 Hz
Voltage drop U_d	approx. 1.2 V (200 mA)
Operating current I_e	200 mA
No-load current I_0	approx. 3.5 mA (24 V)

Outputs

Design of control output	PNP

LED switching conditions display

LED switching conditions display (Y/N)	Yes
- yellow LED	

ATEX

Explosion protection categories for gases	None
Explosion protected category for dusts	None

Dimensions

Dimensions of the sensor	
- Length of sensor	100 mm
- Diameter of sensor	M30

notice

Instead of nuts, a mounting clamp can be provided.

Diagram

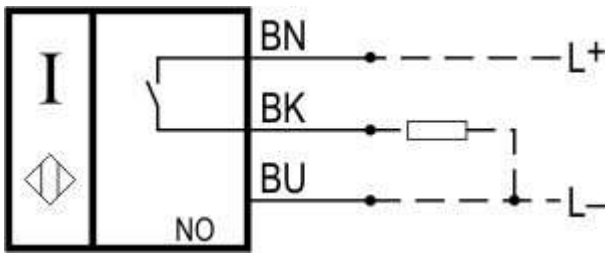

Note Diagram

positive break NC contact

active

no active

Normally-open contact

Normally-closed contact

Ordering code

IFL **(1)**-**(2)**(3)-**(4)**(5)(6)(7)-**(8)**

(1)	
10	Switch distance 10 mm
15	Switch distance 15 mm
(2)	
30	cylinder, thread M30, Metal film
300	cylinder, thread M30, Plastic
(3)	
without	Included in standard version Design
M	miniature body
L	Long design
(4)	
01	Opener (NC)
10	Normally open contact (NO)
10/01	Normally open contact (NO) / Opener (NC) with Wiring compartment
11	Normally open contact (NO) / Opener (NC) antivalent
(5)	
without	Cable
ST	Connector
T	Conductor with strain relief
D	DC 2-wire
(6)	
without	Included in standard version Plug-in connection
2	Alternative Plug-in connection
(7)	
N	n-type
P	p-type
(8)	
1310	Max. +110°C *(Only for Alternating current AC)*
2130	Max. +130°C, without LED switching conditions display
1766	Max. +110°C *(Only for p-type or n-type)*

Documents

Mounting and wiring instructions (de, en, fr, it) 79 kB, 05.10.2010
Code: m_fl1p01

CCC certification (en) 357 kB, 17.01.2012
Code: q_iflp02

CCC certification (cn) 349 kB, 17.01.2012
Code: q_iflp03

Images

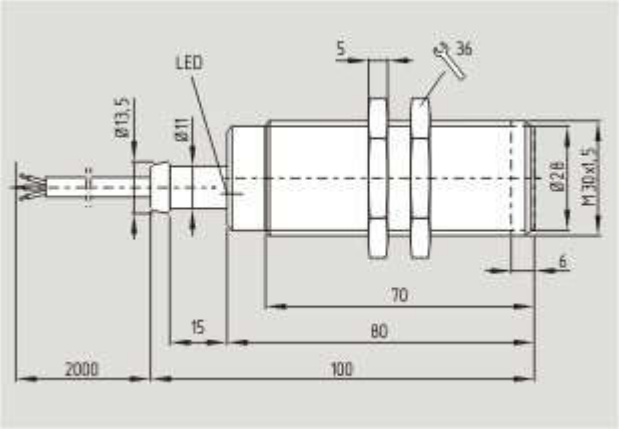

Dimensional drawing (basic component)

Image

Image
et=sS