**RL 65-21/12H**

# DC centrifugal compact fan

single-intake



**ebm-papst St. Georgen GmbH & Co. KG**
Hermann-Papst-Str. 1
D-78112 St. Georgen
Phone +49 (0) 7724 81-0
Fax +49 (0) 7724 81-1309
info2@de.ebmpapst.com
www.ebmpapst.com

## Nominal data

| Type | RL 65-21/12H | |
|---|---|---|
| Nominal voltage | VDC | 12 |
| Nominal voltage range | VDC | 6.8 .. 13.2 |
| Speed (rpm) | $min^{-1}$ | 4900 |
| Power consumption | W | 19.2 |
| Min. ambient temperature | °C | -20 |
| Max. ambient temperature | °C | 55 |
| Air flow | $m^3/h$ | 61 |
| Sound power level | B | 6.8 |

ml = Max. load · me = Max. efficiency · fa = Free air · cs = Customer specification · ce = Customer equipment
Subject to change

# DC centrifugal compact fan

single-intake

## Technical description

| | |
|---|---|
| **General description** | Forward-curved impeller |
| **Weight** | 0.170 kg |
| **Dimensions** | 97 x 93.5 x 33 mm |
| **Impeller material** | Glass-fiber reinforced plastic |
| **Housing material** | Scroll housing made of glass-fiber reinforced plastic. |
| **Airflow direction** | Axial intake, radial discharge from outlet. |
| **Storage** | Ball bearing |
| **Service life L10 at 40 °C** | 55000 h |
| **Service life L10 at maximum temperature** | 40000 h |
| **Cable** | With leads AWG 26, TR 64 |
| **Motor protection** | Protection against reverse polarity and blocked rotor. |



ebm-papst St. Georgen GmbH & Co. KG · Hermann-Papst-Str. 1 · D-78112 St. Georgen · Phone +49 (0) 7724 81-0 · Fax +49 (0) 7724 81-1309 · info2@de.ebmpapst.com · www.ebmpapst.com

# DC centrifugal compact fan

single-intake

## Product drawing

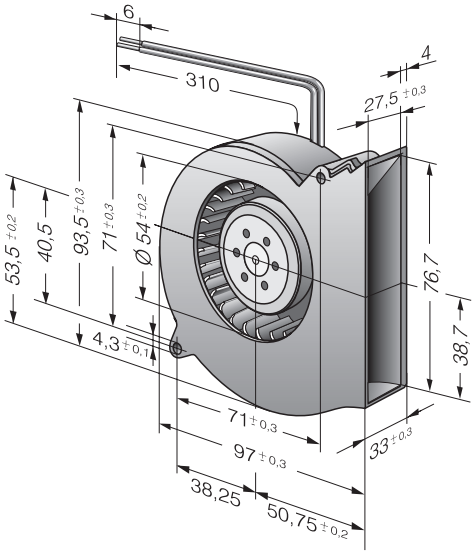




ebm-papst St. Georgen GmbH & Co. KG · Hermann-Papst-Str. 1 · D-78112 St. Georgen · Phone +49 (0) 7724 81-0 · Fax +49 (0) 7724 81-1309 · info2@de.ebmpapst.com · www.ebmpapst.com

# DC centrifugal compact fan

single-intake

## Curves: Air performance

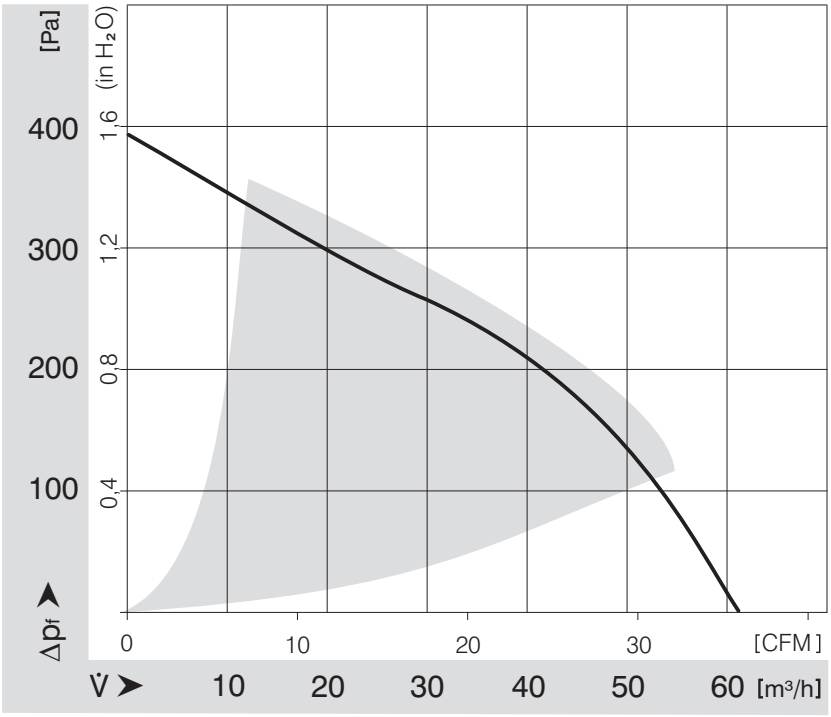




ebm-papst St. Georgen GmbH & Co. KG · Hermann-Papst-Str. 1 · D-78112 St. Georgen · Phone +49 (0) 7724 81-0 · Fax +49 (0) 7724 81-1309 · info2@de.ebmpapst.com · www.ebmpapst.com