PMA Prozeß- und Maschinen-Automation GmbH

Industrial controller KS 50-1and KS 52-1



Operating manual

English

9499-040-62811

Valid from: 07/2011

BlueControl

More efficiency in engineering,
more overview in operating:
The projecting environment for the BluePort® controllers



ATTENTION!
Software and Updates on
www.pma-online.de
or on PMA-CD

Description of symbols
in the text:

- General information
- General warning
- Attention: ESD-sensitive devices

on the device:

- Follow the operating instructions

© PMA Prozeß- und Maschinen-Automation GmbH • Printed in Germany
All rights reserved. No part of this document may bereproduced or published in any form
or by any means without prior written permission from the copyright owner.

A publication of PMA Prozeß- und Maschinen Automation
P.O.Box 310229
D-34058 Kassel
Germany

Contents

1	**Mounting**	**5**
2	**Electrical connections**	**7**
2.1	Connecting diagram	7
2.2	Connecting diagram for the options card	8
2.3	Terminal connection	8
3	**Operation**	**12**
3.1	Front view	12
3.2	Behaviour after power-on	13
3.3	Operating level	13
3.4	Maintenance manager / Error list	14
3.5	Self-tuning	16
3.5.1	Preparation before self-tuning	16
3.5.2	Self-tuning start	17
3.5.3	Self-tuning cancellation	**17**
3.5.4	Acknowledgement of failed self-tuning	**17**
3.5.5	Optimization after start-up or at the set-point	17
3.5.6	Selecting the method (ConF / Cntr / tunE)	18
3.5.7	Optimization at the set-point for 3-point stepping controller	21
3.5.8	**Examples for self-tuning attempts**	**22**
3.6	Manual tuning	23
3.7	Second PID parameter set	24
3.8	Alarm handling	25
3.9	Operating structure	27
4	**Configuration level**	**28**
4.1	Configuration survey	28
4.2	Configurations	29
4.3	Set-point processing	38
4.3.1	Set-point gradient / ramp	38
4.4	KS50-1 cooling functions	38
4.4.1	Standard (CYCL = 0)	38

4.4.2 **Switching attitude** linear (CYCL = 1) 39
4.4.3 **Switching attitude** non-linear (CYCL = 2) 39
4.4.4 Heating and cooling with constant period (CYCL = 3) 40
4.5 Configuration examples 41
4.5.1 On-Off controller / Signaller (inverse) 41
4.5.2 2-point and continuous controller (inverse) 42
4.5.3 3-point and continuous controller 43
4.5.4 3-point stepping controller (relay & relay) 44
4.5.5 Δ Z Y - Off controller / 2-point controller with pre-contact 45
4.5.6 KS50-1 with measured value output 46
5 Parameter setting level 48
5.1 Parameter survey 48
5.2 Parameters 49
5.3 Input scaling 52
5.3.1 Input InP.1 52
5.3.2 Input InP.2 52
6 Calibration level 53
7 Programmer 56
8 Special functions 57
8.1 Start-up circuit 57
8.2 Boost function 58
8.3 KS50/52-1 as Modbus master 59
8.4 Linearization 60
9 BlueControl 61
10 Versions 62
11 Technical data 64
12 Safety hints 67
12.1 Reset to default 69

1 Mounting

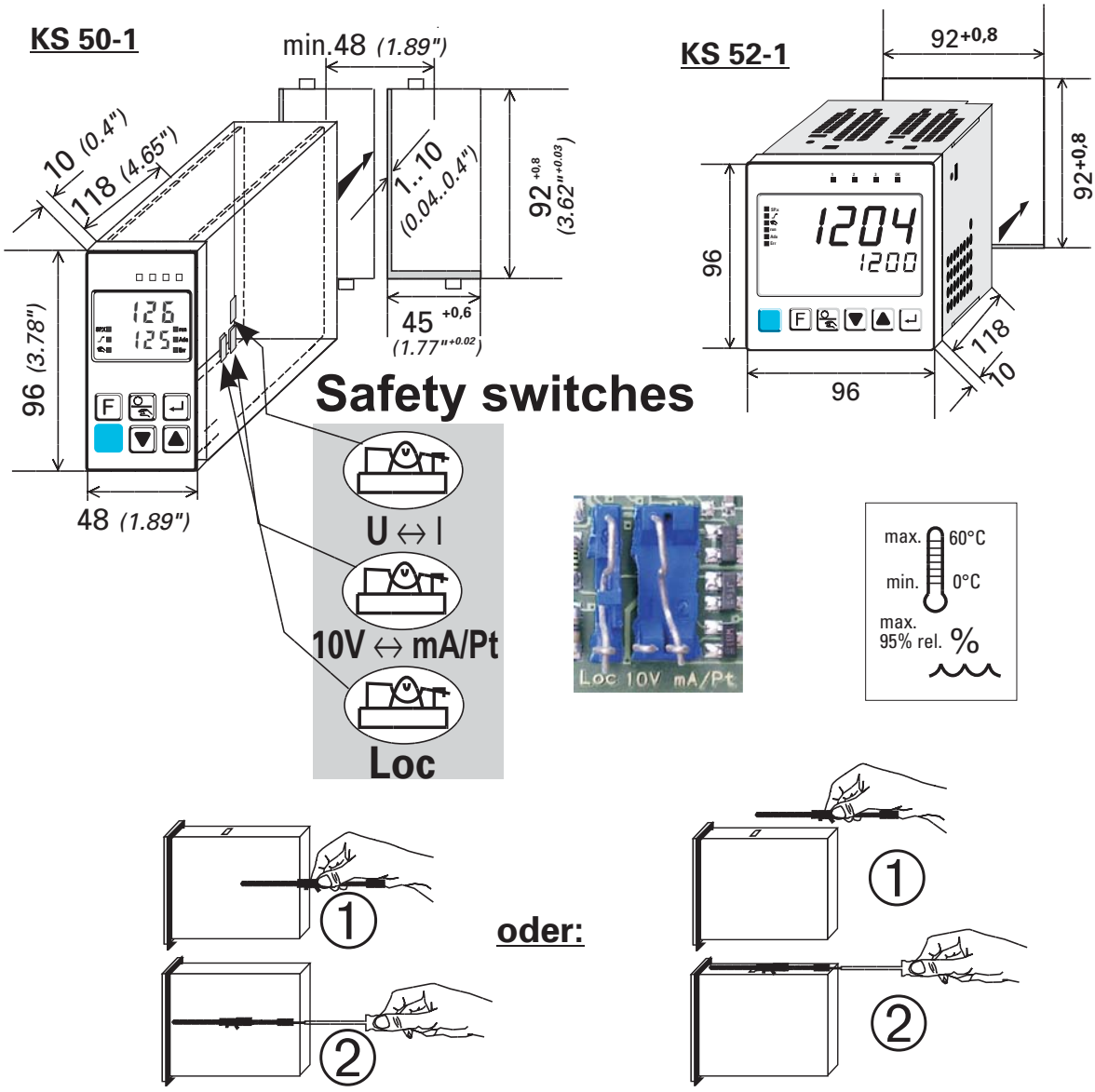

Safety switch:
For access to the safety switches, the controller must be withdrawn from the housing. Squeeze the top and bottom of the front bezel between thumb and forefinger and pull the controller firmly from the housing.

Name of safety switch	Position	Remark	Factory setting
10V ↔ mA/Pt	right	Current signal / Pt100 / thermocouple at InP.1	●
	left	Voltage signal at InP.1	
Loc	open	Levels as set using the BlueControl® eng. tool (default): - Access to controller off / self-tuning / extended operating level = enabled - Password PASS = OFF - Access to parameter setting level / configuration level / calibration level= disabled	
	close	all levels accessible wihout restriction	●
U<-> I only valid for KS5.-1.**4**-.....-... KS5.-1.**5**-.....-...	right (I)	Current / logic on output 3 "OUT3"	●
	left (U)	Voltage on output 3 "OUT3"	

Safety switch 10V ↔ mA/Pt and U<-> I always in position left or right. Leaving the safety switch open may lead to faulty functions!

Caution! The unit contains ESD-sensitive components.

2 Electrical connections

2.1 *Connecting diagram*

Electrical connections for all types KS 5x-1 exept KS 5_-1_**4**-_ 00_ _-_ _

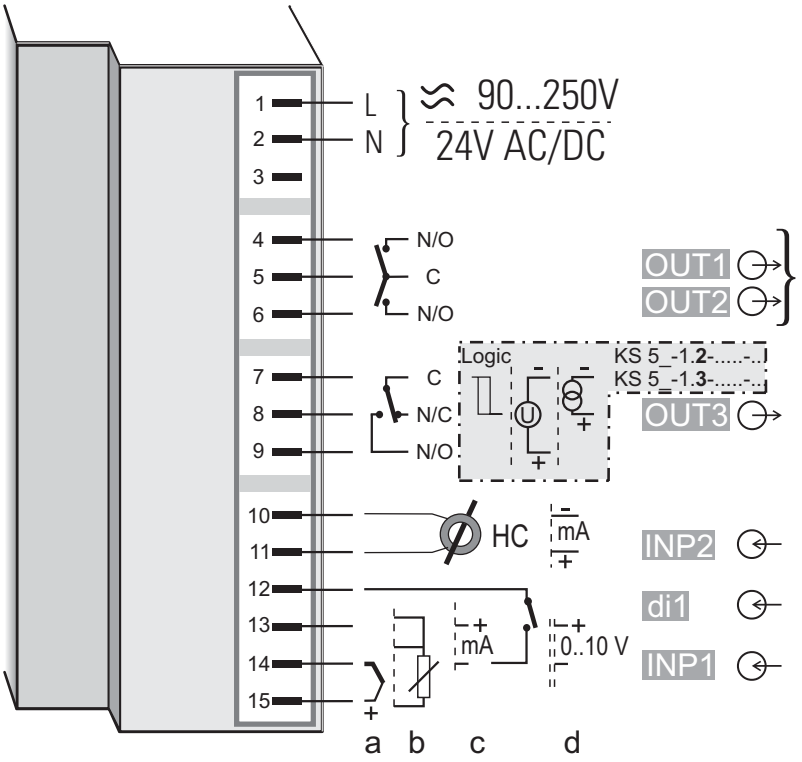

Electrical connections for KS 5_-**1_4**-_____-__

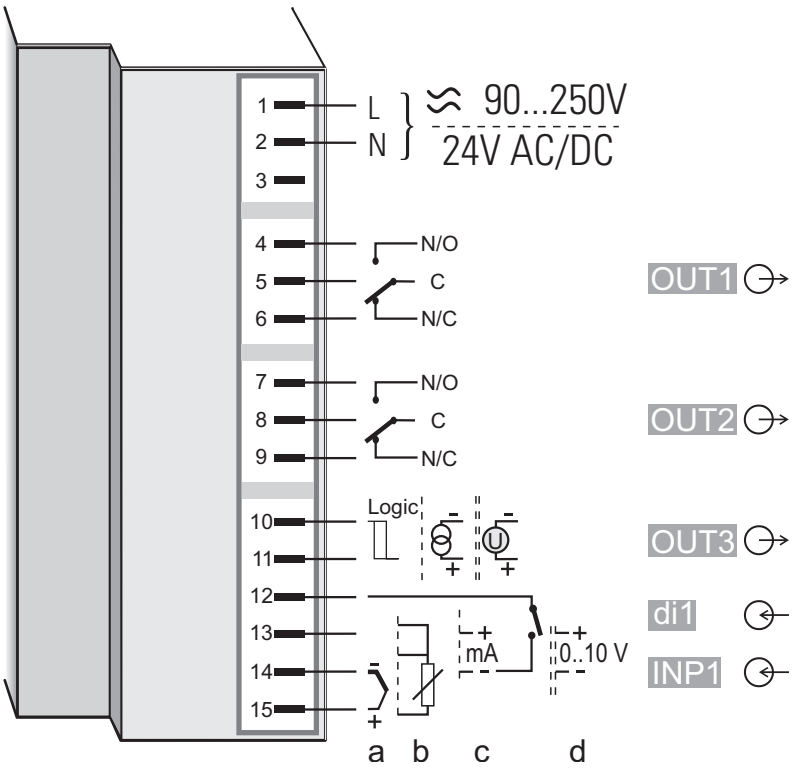

* Safety switch 10V↔ mA/Pt (input INP1 current"10V" ↔ mA/Pt/mV)

** Safety switch U ↔ I (output OUT3 current"U" ↔ voltage"I")

2.2 *Connecting diagram for the options card*

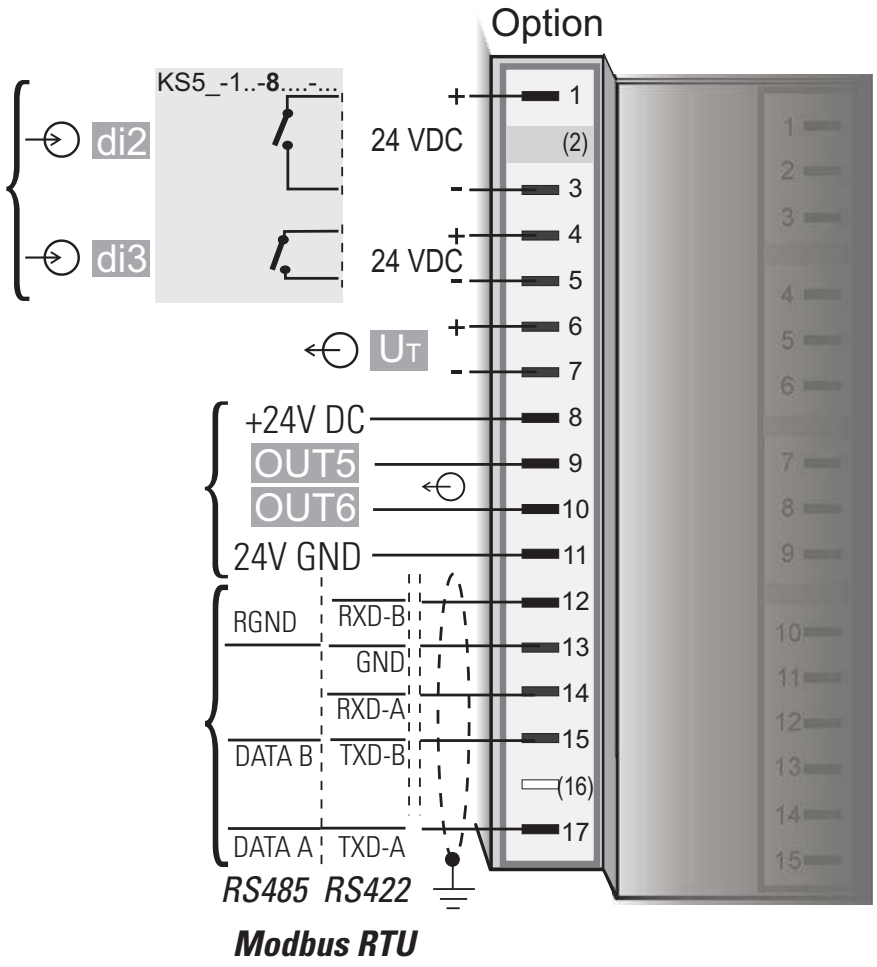

According to order the controller is fitted with:

- flat-pin terminals combined for 1 x 6,3mm or 2 x 2,8mm to DIN 46 244
- or screw terminals for conductor cross section from 0,5 to 2,5mm²
  On instruments with screw terminals, the stripping length must be min. 12 mm. Select end crimps accordingly.

2.3 *Terminal connection*

Power supply connection ❶

See chapter 11 "Technical data"

Connection of input INP1 ❷

Input for variable x1 (process value)

a thermocouple
b resistance thermometer (Pt100/ Pt1000/ KTY/ ...)
c current (0/4...20mA)
d voltage (0/2...10V) *Note: consider the safety switches.

Connection of input INP2 ❸

Sensor type 0...50mA AC or
0/4 ... 20 mA DC for heating current input,
external set-point or
external correcting variable Y.E.

❸ *INP2 current tansformer*

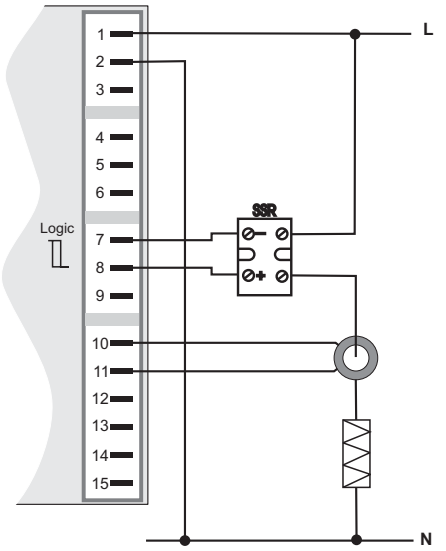

Connection of input di1 ❹

Digital input, configurable as a switch direct / inverse or a push-button. ***

Connection of outputs OUT1/2 ❺

Relay outputs 250V/2A normally open with common contact connection

Connection of output OUT3 ❻

Relay-output
KS5_-1_0-_00_ _-_ _ _ or
KS5_-1_1-_00_ _ -_ _ _
- Relay (250V/2A), potential-free changeover contact

Universal-output
KS5_-1_2-_00_ _-_ _ _or
KS5_-1_3-_00_ _-_ _ _
- Current (0/4...20mA)
- Voltage (0/2...10V)
- Transmitter power supply
- Logic (0..20mA / 0..12V)

❺ *OUT1/2 heating/cooling*

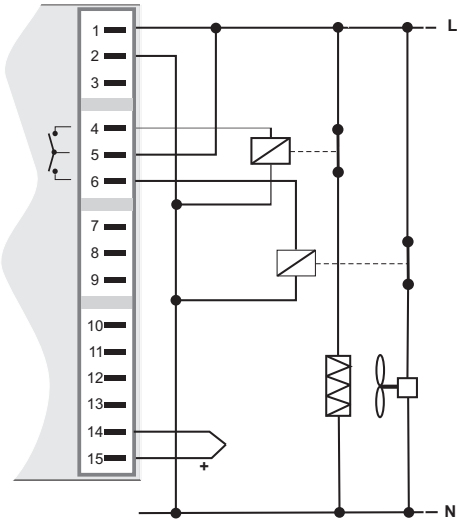

Connection of inputs di2/3 ❼ ***(option)***

Configurable as a switch direct / inverse or as a push-button. ***

- Opto-coupler input
  KS5_-1_ _-100_ _-_ _ _
  Digital inputs (24VDC external) galvanically isolated.
- Potential-free contact input
  KS5_-1_ _-800_ _-_ _ _

Connection of output U_T ❽ ***(option)***

Supply voltage connection for external energization

Connection of outputs OUT5/6 ❾
(option)

Digital outputs (opto-coupler), galvanic isolated, common positive control voltage, output rating: 18...32VDC

Connection of bus interface ❿ ***(option)***

RS422/485 interface with Modbus RTU protocol

****** Adjustment is possible only in common for all digital inputs.***

❽ *2-wire transmitter supply with U_T*

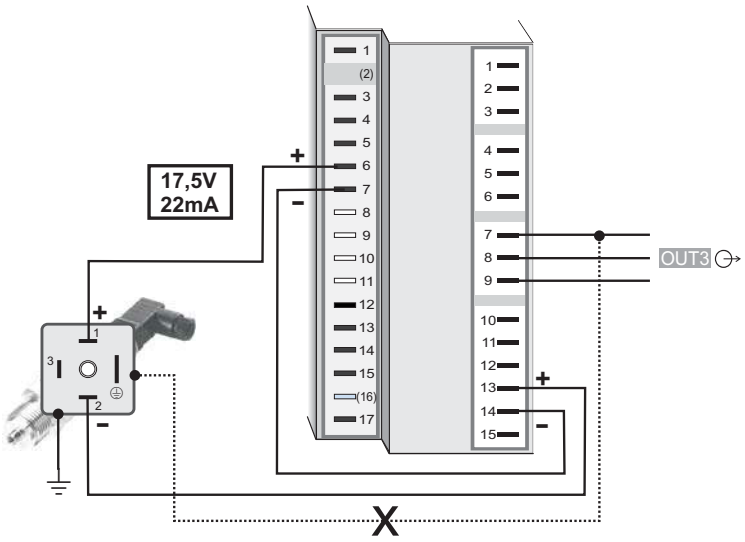

❻ *OUT3 transmitter supply*

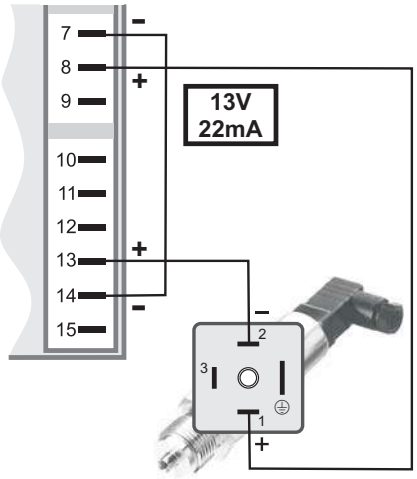

Connection of outputs OUT1 ⓫ and OUT2 ⓬

Relay-output KS5_-1_4-_00_ _-_ _ _ and KS5_-1_5-_00_ _-_ _ _

- Relay (250V/2A), potentialfree changeover contact

Connection of output OUT3 ⓭

Universal output KS5_-1_4-_00_ _-_ _ _und KS5_-1_5-_00_ _- _ _ _

Note: Mind the safety switch.

- current (0/4...20mA)
- voltage(0/2...10V)
- Transmitter power supply
- Logic (0..20mA / 0..12V)

⚠ The analog outputs OUT3 and transmitter supply voltage U_T are connected to different voltage potentials. For this reason, an external galvanic connection of OUT3 and U_T is not permissible for analog outputs.

❼ *Connection of inputs di 2/3*

Option KS5_-1_ _-100 _ _-_ _ _

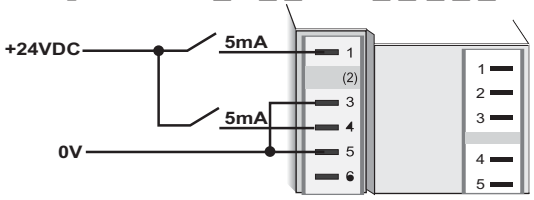

Option KS5_-1_ _-800 _ _-_ _ _

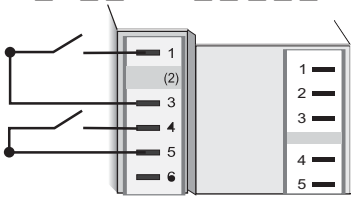

❻ *OUT3 as logic output with solid-state relay (series and parallel connection)*

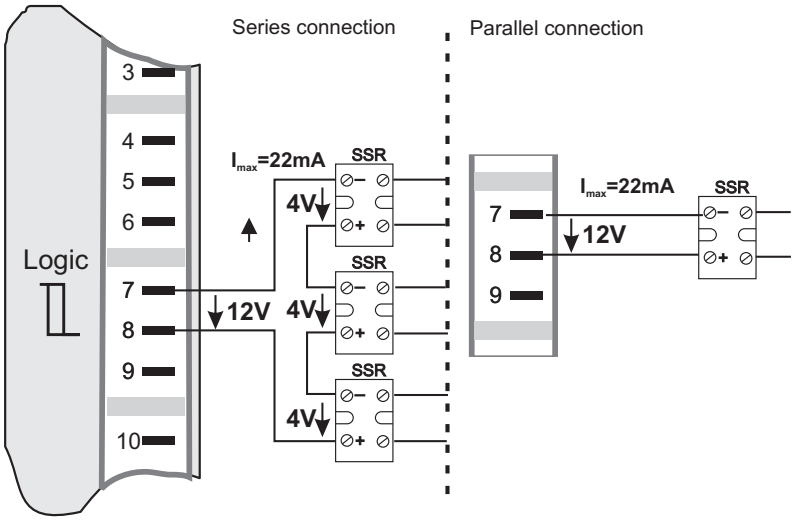

⑩ *RS485 interface (with RS232-RS485 interface converter)* ****

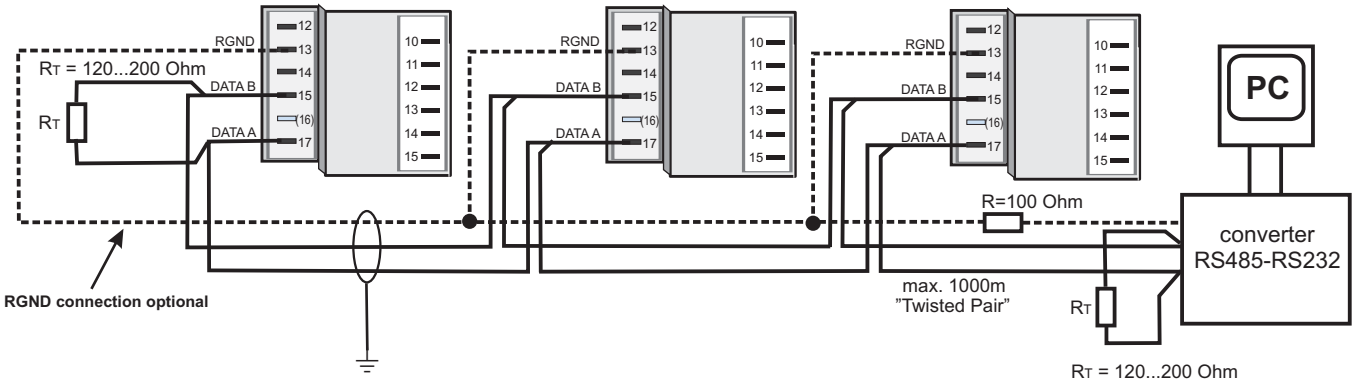

****see Interface description Modbus RTU 9499-040-63611 .

KS5_-1_2-_00_ _-_ _ _. connecting example:

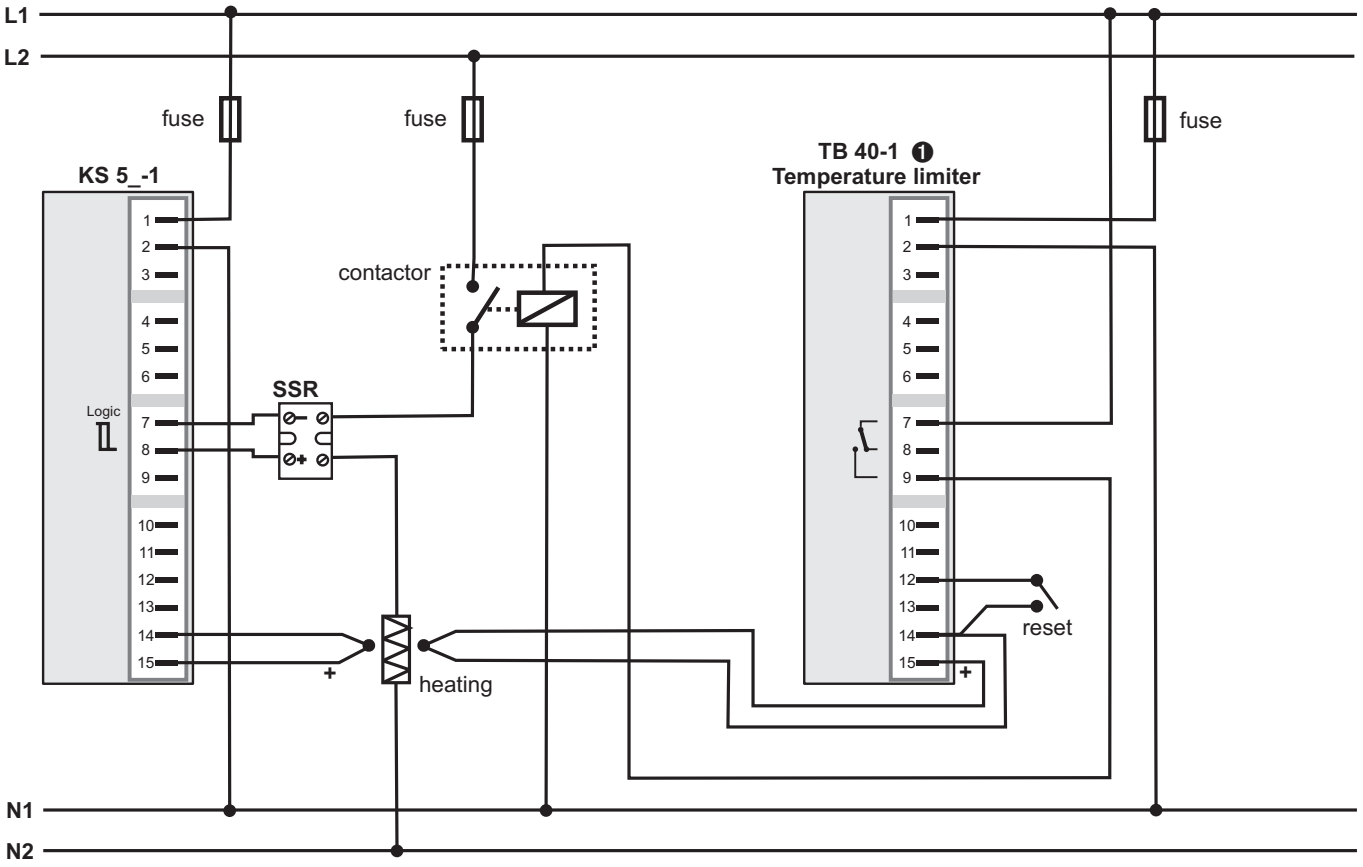

❶ **TB 40-1 Temperature limiter**
Standard version (3 relays):
TB40-100-0000D-000
→ other versions on request

CAUTION: Using a temperature limiter is recommendable in systems where overtemperature implies a fire hazard or other risks.

3 Operation

3.1 *Front view*

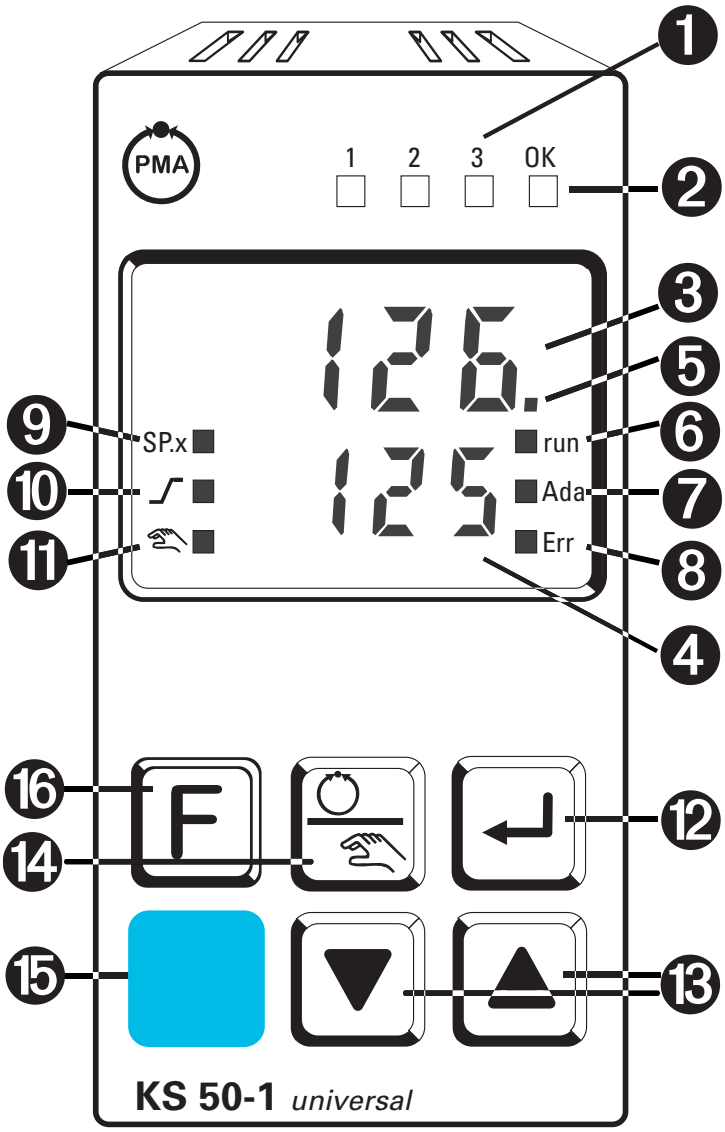

❶ For function states / see LED assignment (CONF / OTHR / LED)
❷ Lit with limit value 1 (PARA / LIM) not exceeded
❸ Process value display
❹ Set-point, controller output
❺ Signals CONF and PARA level
❻ Programmer running
❼ Self-tuning active
❽ Entry in error list
❾ Set-point SP.2 or SP.E is effective
❿ Set-point gradient effective
⓫ Manual/automatic switch-over:
Off: Automatic
On: Manual
(changing possible)
Blinks: Manual
(changing not possible
(→ CONF / ENTR / MAN)
⓬ Enter key:
calls up extended operating level / error list
⓭ Up/down keys:
changing the set-point or the controller output value
⓮ Manual mode /spec. function
(→ CONF / LOGI)
⓯ PC connection for BlueControl (engineering tool)
⓰ Freely programmable function key

LED colours:

LED 1, 2, 3:	yellow
LED OK:	green
other LEDs:	red

In the upper display line, the process value is always displayed. At parameter, configuration, calibration as well as extended operating level, the bottom display line changes cyclically between parameter name and parameter value.

3.2 *Behaviour after power-on*

After supply voltage switch-on, the unit starts with the **operating level**.
The unit is in the condition which was active before power-off.
If the controller was in manual mode before power-off, the controller starts with the last correcting value after switching on again.

3.3 *Operating level*

The content of the extended operating level is determined by means of BlueControl (engineering tool). Parameters which are used frequently or the display of which is important can be copied to the extended operating level.

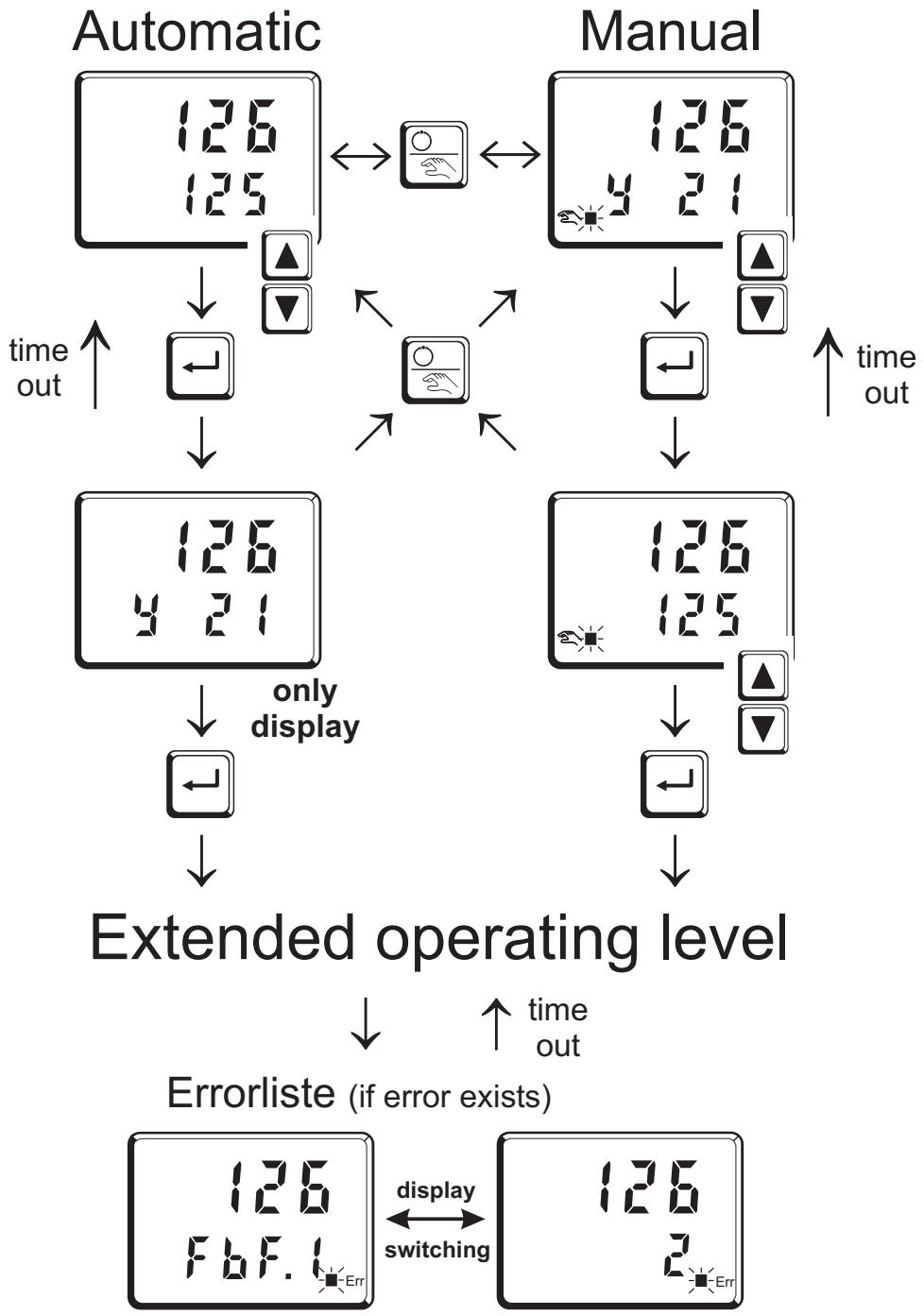

3.4 *Maintenance manager / Error list*



With one or several errors, the extended operating level always starts with the error list. Signalling an actual entry in the error list (alarm, error) is done by the Err LED in the display. This is applicable only, if at least one limit value function, the loop alarm or the heating current alarm is activated. For display of the error list, press ↵ twice.

Err LED status	Signification	Proceed as follows
blinks (Status 2)	Alarm due to existing error	Determine the error type in the error list after removing the error the device changes to Status 1
lit (Status 1)	Error removed, Alarm not acknowledged	Acknowledge the alarm in the error list pressing key ▲ or ▼ the alarm entry is deleted (Status 0).
off (Status 0)	No error, all alarm entries deleted	not visible, exept when ackowledging

Error list:

Name	Description	Cause	Possible remedial action
E.1	Internal error, cannot be removed	▪ E.g. defective EEPROM	▪ Contact PMA service ▪ Return unit to our factory
E.2	Internal error, can be reset	▪ e.g. EMC trouble	▪ Keep measurement and power supply cables in separate runs ▪ Ensure that interference suppression of contactors is provided
E.4	Hardware error	▪ Codenumber and hardware are not identical	▪ Contact PMA service ▪ Electronic-/Optioncard must be exchanged
FbF.1	Sensor break INP1	▪ Sensor defective ▪ Faulty cabling	▪ Replace INP1 sensor ▪ Check INP1 connection
ShE.1	Short circuit INP1	▪ Sensor defective ▪ Faulty cabling	▪ Replace INP1 sensor ▪ Check INP1 connection
POL.1	INP1polarity error	▪ Faulty cabling	▪ Reverse INP1 polarity
FbF.2	Sensor break INP2	▪ Sensor defective ▪ Faulty cabling	▪ Replace INP2 sensor ▪ Check INP2 connection
ShE.2	Short circuit INP2	▪ Sensor defective ▪ Faulty cabling	▪ Replace sensor INP2 ▪ Check INP2 connection
POL.2	INP2 polarity	▪ Faulty cabling	▪ Reverse INP2 polarity
HCA	Heating current alarm (HCA)	▪ Heating current circuit interrupted, I< HC.A or I> HC.A (dependent of configuration) ▪ Heater band defective	▪ Check heating current circuit ▪ If necessary, replace heater band
SSr	Heating current short circuit (SSR)	▪ Current flow in heating circuit at controller off ▪ SSR defective	▪ Check heating current circuit ▪ If necessary, replace solid-state relay

Name	Description	Cause	Possible remedial action
LooP	Control loop alarm (LOOP)	▪ Input signal defective or not connected correctly ▪ Output not connected correctly	▪ Check heating or cooling circuit ▪ Check sensor and replace it, if necessary ▪ Check controller and switching device
AdA.H	Self-tuning heating alarm (ADAH)	▪ See Self-tuning heating error status	▪ see Self-tuning heating error status
AdA.C	Self-tuning heating alarm cooling (ADAC)	▪ See Self-tuning cooling error status	▪ see Self-tuning cooling error status
L im.1	stored limit alarm 1	▪ adjusted limit value 1 exceeded	▪ check process
L im.2	stored limit alarm 2	▪ adjusted limit value 2 exceeded	▪ check process
L im.3	stored limit alarm 3	▪ adjusted limit value 3 exceeded	▪ check process
I nF.1	time limit value message	▪ adjusted number of operating hours reached	▪ application-specific
I nF.2	duty cycle message (digital ouputs)	▪ adjusted number of duty cycles reached	▪ application-specific

Saved alarms (Err-LED is lit) can be acknowledged and deleted with the digital input di1/2/3, the F-key or the -key or the.
Configuration, see page 36: `ConF /LOGI /Err.r`

If an alarm is still valid that means the cause of the alarm is not removed so far (Err-LED blinks), then other saved alarms can not be acknowledged and deleted. Not applicable to heating current alarm.

Error status:
Self-tuning heating (AdA.H) and cooling (AdA.C) error status:

Error status	Description	Behaviour
0	No error	
3	Faulty control action	Re-configure controller (inverse ↔ direct)
4	No response of process variable	The control loop is perhaps not closed: check sensor, connections and process
5	Low reversal point	Increase (AdA.H) max. output limiting y.H i or decrease (AdA.C) min. output limiting y.L o
6	Danger of exceeded set-point (parameter determined)	If necessary, increase (inverse) or reduce (direct) set-point
7	Output step change too small ($\Delta y > 5\%$)	Increase (AdA.H) max. output limiting y.H i or reduce (AdA.C) min. output limiting y.L o
8	Set-point reserve too small	Increase set-point (invers), reduce set-point (direct) or increase set-point range (→ PArA /SELP /SP.LO and SP.H i)
9	Impulse tuning failed	The control loop is perhaps not closed: check sensor, connections and process

3.5 *Self-tuning*

For determination of optimum process parameters, self-tuning is possible.
After starting by the operator, the controller makes an adaptation attempt, whereby the process characteristics are used to calculate the parameters for fast line-out to the set-point without overshoot.

The following parameters are optimized when self-tuning:
Parameter set 1:

Pb1	Proportional band 1 (heating) in engineering units [e.g. °C]
t.1	Integral time 1 (heating) in [s] → only, unless set to OFF
td1	Derivative time 1 (heating) in [s] → only, unless set to OFF
t1	Minimum cycle time 1 (heating) in [s]. This parameter is optimized only, unless parameter CntR/AdtO was configured for "no self-tuning" using BlueControl®

Pb2	Proportional band 2 (cooling) in engineering units [e.g. °C]
t.2	Integral time 2 (cooling) in [s] → only, unless set to OFF
td2	Derivative time 2 (cooling) in [s] → only, unless set to OFF
t2	Minimum cycle time 2 (cooling) in [s]. This parameter is optimized only, unless parameter CntR/AdtO was configured for "no self-tuning"using BlueControl®

Parameterset 2: according to Parameterset 1 (see page 24)

3.5.1 Preparation before self-tuning

- As a prerequisite of process evaluation, a stable condition is required. For this reason, the controller waits, until the process has reached a stable condition after self-tuning start.
  The rest condition is considered as reached, when the process value oscillation is smaller than ± 0,5% of (rnG.H - rnG.L). The limits of the control range must be adjusted for the controller operating range, i.e. rnG.L and rnG.H must be adjusted to the limits within which control must take place (Configuration→Controller→span start and end of control range) ConF →CntR → rnG.L and rnG.H
- For starting the self-tuning after start-up, a clearance of 10% of (SP.LO ... SP.H.) is required. As the values PArA/SEtP/SP.LO and PArA/SEtP/SP.H. mustl always be within the control range, no restriction is applicable if these values are adjusted correctly.
- Determine which parameter set must be optimized.
  -The currently effective parameter set is optimized.
  → activate the corresponding parameter set (1 or 2).
- Determine which parameter must be optimized (see the list given above)
- Select the method for self-tuning
  See Chapter 3.5.6
  - Step attempt after start-up
  - Pulse attempt after start-up
  - Optimization at the set-point

3.5.2 Self-tuning start

Self-tuning start can be disabled using BlueControl® (engineering tool) (CONF / OPTI / ADAP).

Starting the self-tuning:

Self-tuning is started by pressing the ↵ and ▲ keys simultaneously, or via the interface. If parameter CONF / CNTR / STRT is set to 1 self-tuning starts also after power-on and when detecting process value oscillations.

Self-tuning status display

Ada-LED-Status	Meaning
blinks	Waiting until process is at rest
lit	seft tuning running
off	self tuning not active e.g. ready

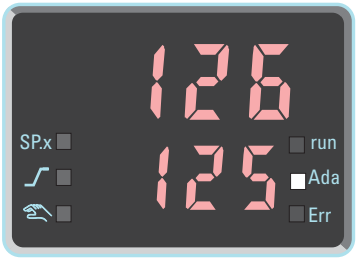

3.5.3 Self-tuning cancellation

- **By the operator:**
  Self-tuning is cancelled by pressing the ↵ and ▲ keys simultaneously. Switching over to manual operation also causes cancellation of the self-tuning procedure.
  After self-tuning cancellation, the controller continues operating using the parameters valid prior to self-tuning start.
- **By the controller:**
  If the Err LED starts blinking during self-tuning, successful self-tuning is prevented due to the control conditions. In this case, self-tuning was cancelled by the controller. The controller continues operating using the parameters valid before self-tuning start.
  If the self-tuning method with step attempt was used **and** self-tuning was started from the manual mode, the controller uses the last valid correcting variable after self-tuning start, until the self-tuning error message is acknowledged. Subsequently, the controller continues operating using the parameters valid before self-tuning start.

Causes of cancellation:

→ Page 8: " Self-tuning heating (ADAH) and cooling (ADAC) error status"

3.5.4 Acknowledgement of failed self-tuning

When pressing the ↵ key, the controller switches over to correcting variable display (Y ....). After pressing the ↵ key again, the controller goes to the error list of the extended operating level. The error message can be acknowledged by switching the message to 0 using the ▼ or the ▲ key.
After acknowledging the error message, the controller continues operating in the automatic mode, using the parameters valid prior to self-tuning start.

3.5.5 Optimization after start-up or at the set-point

The two methods are optimization after start-up and at the set-point.
As control parameters are always optimal only for a limited process range, various methods can be selected dependent of requirements. If the process behaviour is very different after start-up and directly at the set-point, parameter sets 1 and 2 can be optimized using different methods. Switch-over between parameter sets dependent of process status is possible (see page).

Optimization after start-up: (see page 18)
Optimization after start-up requires a certain separation between process value and set-point. This separation enables the controller to determine the control parameters by evaluation of the process when lining out to the set-point.
This method optimizes the control loop from the start conditions to the set-point, whereby a wide control range is covered.
We recommend selecting optimization method **"Step attempt after start-up"** with tunE = 0 first. Unless this attempt is completed successfully, we then recommend a **"Pulse attempt after start-up"**.

Optimization at the set-point: (see page 19)
For optimizing at the set-point, the controller outputs a disturbance variable to the process. This is done by changing the output variable shortly. The process value changed by this pulse is evaluated. The detected process parameters are converted into control parameters and saved in the controller.
This procedure optimizes the control loop directly at the set-point. The advantage is in the small control deviation during optimization.

3.5.6 Selecting the method (ConF / Cntr / tunE)

Selection criteria for the optimization method:

	Step attempt after start-up	Pulse attempt after start-up	Optimization at the set-point
tunE = 0	sufficient set-point reserve is provided		sufficient set-point reserve is **not** provided
tunE = 1		sufficient set-point reserve is provided	sufficient set-point reserve is **not** provided
tunE = 2	Only step attempt after start-up required		

Sufficient set-point reserve:
inverse controller:(with process value < set-point- (10% of rnGH - rnGL)
direct controller: (with process value > set-point + (10% of rnGH - rnGL)

inverse controller:
process value is (10% of rnGH - rnGL) below the set-point

direct controller:
process value is (10% of rnGH - rnGL) above the set-point

Step attempt after start-up

Condition: - tunE = 0 and sufficient set-point reserve provided **or**
- tunE = 2

The controller outputs 0% correcting variable or Y.Lo and waits, until the process is at rest (see start-conditions on page 8).
Subsequently, a correcting variable step change to 100% or Y.Hi is output.
The controller attempts to calculate the optimum control parameters from the process response. If this is done successfully, the optimized parameters are taken over and used for line-out to the set-point.

With a *3-point controller,* this is followed by *"cooling".*
After completing the 1st step as described, a correcting variable of -100% or Y.Lo (100% cooling energy) is output from the set-point. After successfull determination of the "cooling parameters", line-out to the set-point is using the optimized parameters.

Pulse attempt after start-up

Condition: - tunE = 1 and sufficient set-point reserve provided.

The controller outputs 0% correcting variable or Y.Lo and waits, until the process is at rest (see start conditions page 8)
Subsequently, a short pulse of 100% or Y.Hi is output (Y=100%) and reset.
The controller attempts to determine the optimum control parameters from the process response. If this is completed successfully, these optimized parameters are taken over and used for line-out to the set-point.

With a *3-point controller,* this is followed by "cooling".

After completing the 1st step as described and line-out to the set-point, correcting variable "heating" remains unchanged and a cooling pulse (100% cooling energy) is output **additionally**. After successful determination of the "cooling parameters", the optimized parameters are used for line-out to the set-point.

Optimization at the set-point

Conditions:

- A sufficient set-point reserve is **not** provided at self-tuning start (see page 18).
- tunE is 0 or 1
- With Strt = 1 configured and detection of a process value oscillation by more than ± 0,5% of (rnG.H - rnG.L) by the controller, the control parameters are preset for process stabilization and the controller realizes an *optimization at the set-point* (see figure "Optimization at the set-point").
- when the step attempt after power-on has failed
- with active gradient function (PArA / SEtP / r.SP ≠ OFF), the set-point gradient is started from the process value and there isn't a sufficient set-point reserve.

Optimization-at-the-set-point procedure:
The controller uses its instantaneous parameters for control to the set-point. In lined out condition, the controller makes a pulse attempt. This pulse reduces the correcting variable by max. 20% ❶, to generate a slight process value undershoot. The changing process is analyzed and the parameters thus calculated are recorded in the controller. The optimized parameters are used for line-out to the set-point.

Optimization at the set-point

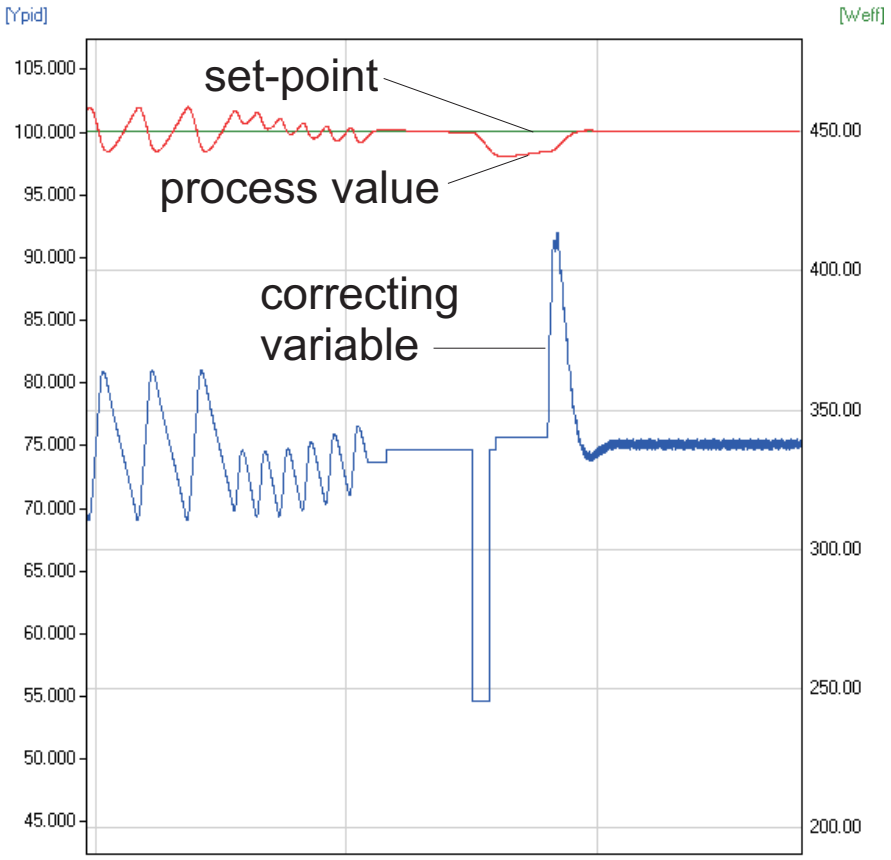

With a *3-point controller,* optimization for the “heating“ or “cooling” parameters occurs dependent of the instantaneous condition.
While the controller is in the "heating-phase" the heating-parameters are determined. If the controller is in the "cooling-phase" the cooling-parameters are determined.

❶ If the correcting variable is too low for reduction in lined out condition it is increased by max. 20%.

3.5.7 Optimization at the set-point for 3-point stepping controller

As position feedback is not provided, the controller calculates the actuator position internally by adjusting an integrator with the adjusted actuator travel time. For this reason, precise entry of the actuator travel time (t t), as time between stops is highly important.
Due to position simulation, the controller knows whether an increased or reduced pulse must be output. After supply voltage switch-on, position simulation is at 50%. When the motor actuator was varied by the adjusted travel time in one go, internal calculation occurs, i.e. the position corresponds to the simulation:

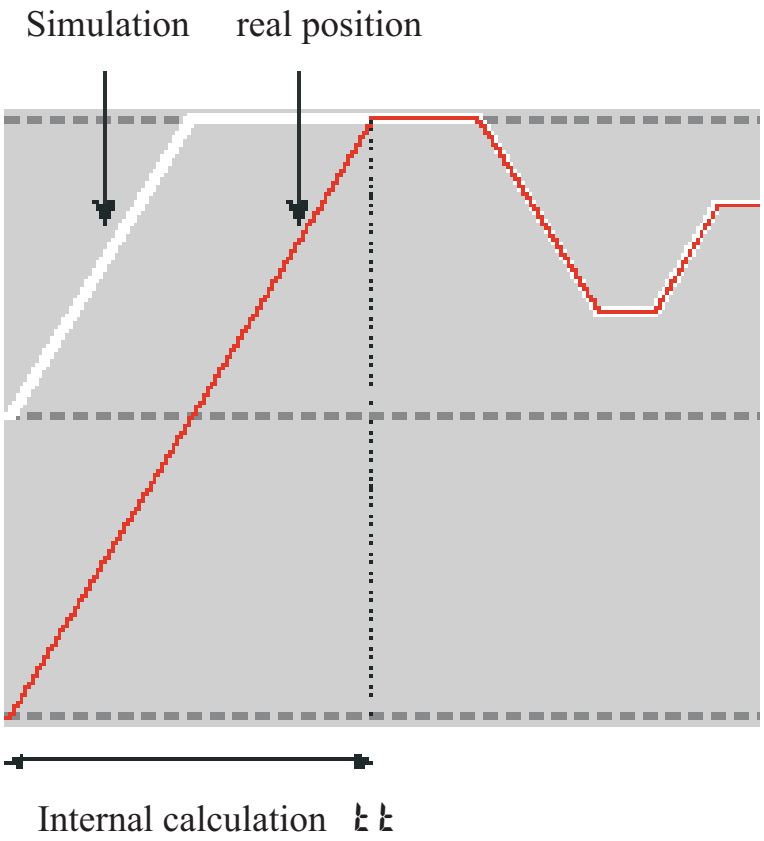

Internal calculation always occurs, when the actuator was varied by travel time t t ***in one go*** , independent of manual or automatic mode. When interrupting the variation, internal calculation is cancelled. Unless internal calculation occurred already after self-tuning start, it will occur automatically by closing the actuator once.

Unless the positioning limits were reached within 10 hours, a significant deviation between simulation and actual position may have occurred. In this case, the controller would realize minor internal calculation, i.e. the actuator would be closed by 20 %, and re-opened by 20 % subsequently. As a result, the controller knows that there is a 20% reserve for the attempt.

3.5.8 Examples for self-tuning attempts

(controller inverse, heating or heating/cooling)

Start: heating power switched on

Heating power Y is switched off (❶). When the change of process value X was constant during one minute (❷), the power is switched on (❸). At the reversal point, the self-tuning attempt is finished and the new parameter are used for controlling to set-point W.

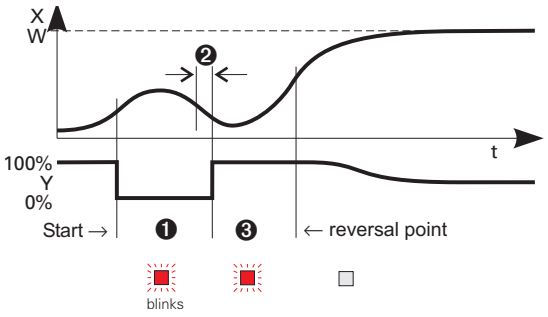

Start: heating power switched off

The controller waits 1,5 minutes (❶). Heating power Y is switched on (❷). At the reversal point, the self-tuning attempt is finished and control to the set-point is using the new parameters.

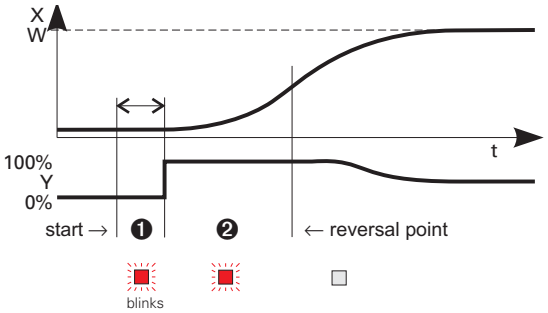

Self-tuning at the set-point ⚠

The process is controlled to the set-point. With the control deviation constant during a defined time (❶), the controller outputs a reduced correcting variable pulse (max. 20%) (❷). After determination of the control parameters using the process characteristic (❸), control is started using the new parameters (❹).

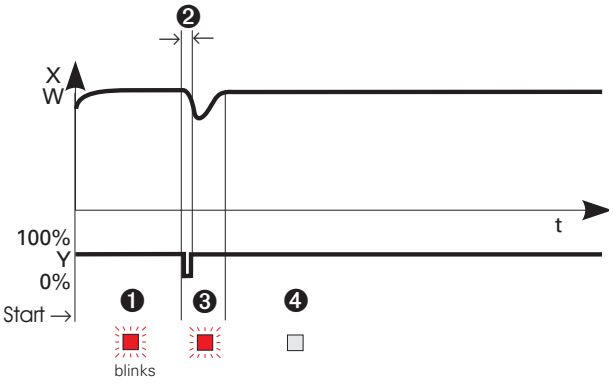

Three-point controller ⚠

The parameter for heating and cooling are determined in two attempts. The heating power is switched on (❶). Heating parameters Pb1, t.1, td1 and t1 are determined at the reversal point. The process is controlled to the set-point (❷). With constant control deviation, the controller provides a cooling correcting variable pulse (❸). After determining its cooling parameters Pb2, t.2, td2 and t2 (❹) from the process characteristics , control operation is started using the new parameters (❺).

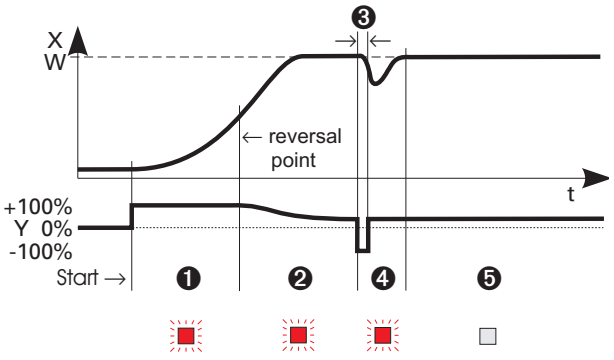

⚠ During phase ❸, heating and cooling are done simultaneously!

3.6 *Manual tuning*

The optimization aid should be used with units on which the control parameters shall be set without self-tuning.

For this, the response of process variable x after a step change of correcting variable y can be used. Frequently, plotting the complete response curve (0 to 100%) is not possible, because the process must be kept within defined limits. Values T_g and x_{max} (step change from 0 to 100 %) or Δt and Δx (partial step response) can be used to determine the maximum rate of increase v_{max}.

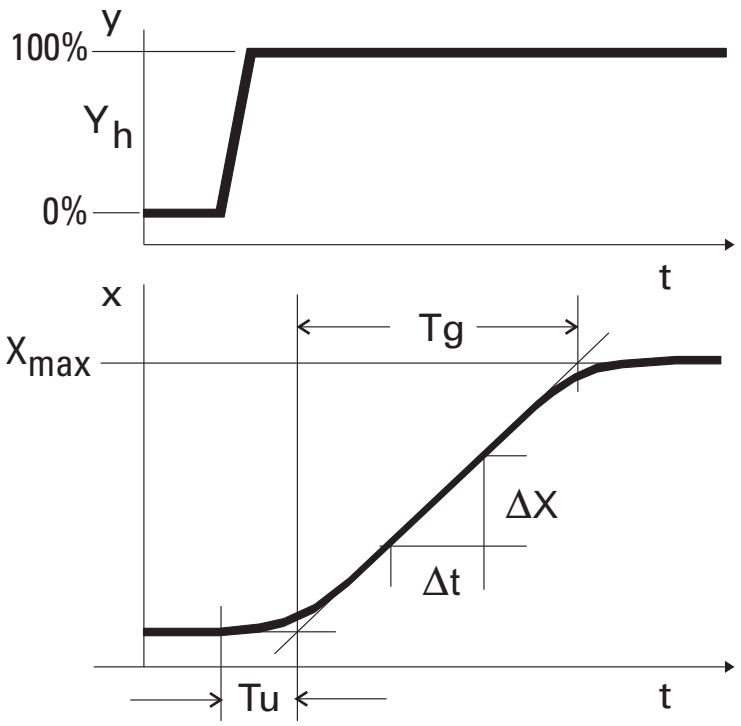

y = correcting variable
Y_h = control range
Tu = delay time (s)
Tg = recovery time (s)
X_{max} = maximum process value

$$V_{max} = \frac{Xmax}{Tg} = \frac{\Delta x}{\Delta t} \triangleq \text{ max. rate of increase of process value}$$

The control parameters can be determined from the values calculated for delay time T_u, maximum rate of increase v_{max}, control range X_h and characteristic K according to the **formulas** given below. Increase Xp, if line-out to the set-point oscillates.

Formulas

K = Vmax * Tu

With 2-point and 3-point controllers, the cycle time must be adjusted to
t1 / t2 ≤ 0,25 * Tu

controller behavior	Pb1 [phy. units]	td1 [s]	t.1 [s]
PID	1,7 * K	2 * Tu	2 * Tu
PD	0,5 * K	Tu	OFF
PI	2,6 * K	OFF	6 * Tu
P	K	OFF	OFF
3-point-stepping	1,7 * K	Tu	2 * Tu

Parameter adjustment effects

Parameter		Control	Line-out of disturbances	Start-up behaviour
Pb1	higher	increased damping	slower line-out	slower reduction of duty cycle
	lower	reduced damping	faster line-out	faster reduction of duty cycle
td1	higher	reduced damping	faster response to disturbances	faster reduction of duty cycle
	lower	increased damping	slower response to disturbances	slower reduction of duty cycle
t.1	higher	increased damping	slower line-out	slower reduction of duty cycle
	lower	reduced damping	faster line-out	faster reduction of duty cycle

3.7 *Second PID parameter set*

The process characteristic is frequently affected by various factors such as process value, correcting variable and material differences.
To comply with these requirements, the controller can be switched over between two parameter sets. Parameter sets PAr.A and PAr.2 are provided for heating and cooling.

Dependent of configuration, switch-over to the second parameter set (ConF/LOG/P.id.2) is via key F , one of digital inputs di1, di2, di3, or interface (OPTION).

Self-tuning is always done using the active parameter set, i.e. the second parameter set must be active for optimizing.

3.8 *Alarm handling*

Max. three alarms can be configured and assigned to the individual outputs. Generally, outputs Out.1... Out.6 can be used each for alarm signalling. If more than one signal is linked to one output the signals are OR linked. Each of the 3 limit values L im.1 … L im.3 has 2 trigger points H.x (Max) and L.x (Min), which can be switched off individually (parameter = "OFF"). Switching difference HYS.x of each limit value is adjustable.

① *Operaing principle absolut alarm*
L.1 = OFF

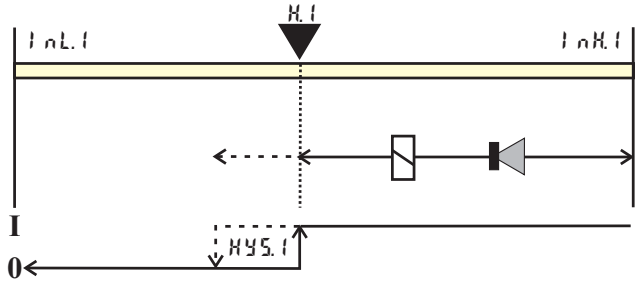

② *Operating principle relative alarm*
L.1 = OFF

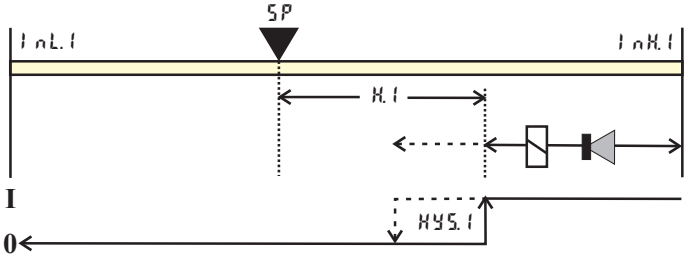

H.1 = OFF

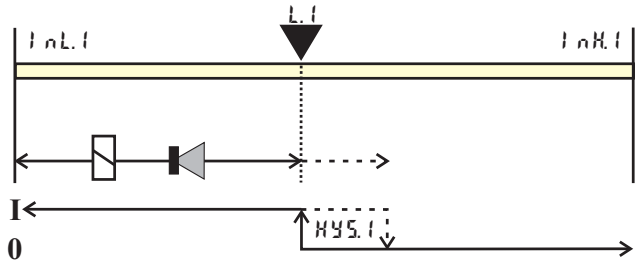

H.1 = OFF

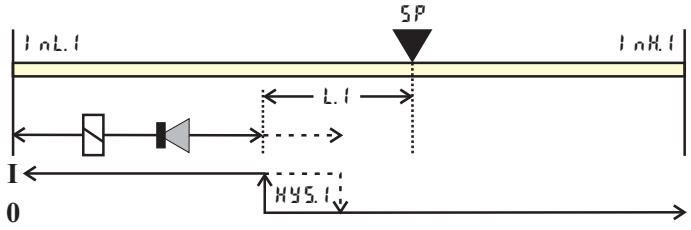

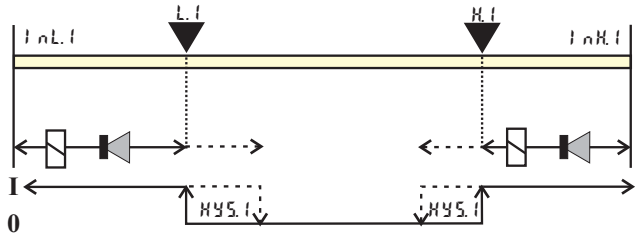

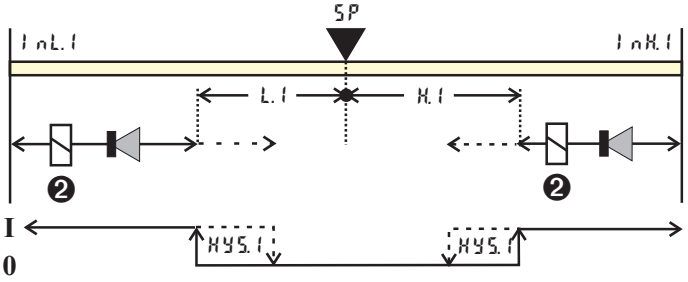

❶: normally closed (ConF / Out.x / OAct = 1) (See examples)

❷: normally open (ConF / Out.x / OAct = 0) (The output relay action is inverted)

The allocation of the device's LEDs is not invertable and must be considered separately.

The variable to be monitored can be selected separately per configuration for each alarm.
The following variables are available (ConF / L in / Src.x):

Variable (Src.x)	Remark	Alarm type
Process value		Absolute
Control deviation xw	Process value - effective set-point. The effective set-point Weff is used. E.g with a ramp, this is the changing set-point rather than the target set-point.	Relative
Control deviation xw + suppression after start-up or set-point change with time limit	The alarm output is suppressed after switch-on or after a set-point change, until the process value is within the limits for the first time. At the latest after elapse of time 10 x t.1 the alarm is activated (t.1 = integral time 1; parameter → CntR). If t.1 is switched off (t.1 = OFF), this is considered as ∞ , i.e. the alarm is not activated before the process value was within the limits once.	Relative
Effective set-point Weff	The effective set-point Weff for control.	Absolute
Correcting variable y	y = controller output signal	Absolute
Deviation from SP internal	Process value - internal set-point. The internal set-point is used. E.g. with a ramp, this is the target set-point instead of the varying effective set-point Weff.	Relative
Control deviation xw + suppression after start-up or set-point change without time limit	After switch-on or after a set-point change, the alarm output is suppressed , until the process value is within the limits for the first time.	Relative

During alarm configuration, the following functions can be selected (ConF / L in / Fnc.x):

Function (Fnc.x)	Remark
Switched off	No limit value monitoring.
Measured value	Process value monitoring. When exceeding the limit, an alarm is generated.The alarm is reset automatically, when the process value is "within the limits" (including hysteresis) again.
Measured value + latch	Process value monitoring + latching of the alarm condition. When exceeding the limit value, an alarm is output. A latched alarm persists, until it is reset manually.

3.9 *Operating structure*

After supply voltage switch-on, the controller starts with the **operating levels**. The controller status is as before power off.

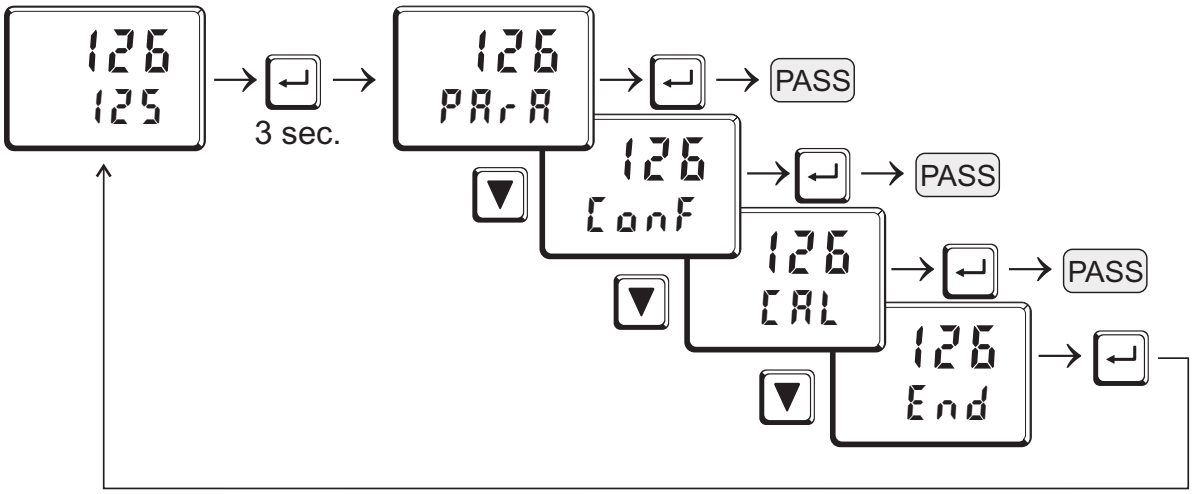

PArA - level: At PArA - level, the right decimal point of the upper display line is *lit continuously*.

ConF - level: At ConF - level, the right decimal point of upper display line *blinks*.

PASS

When safety switch **Loc** is open, only the levels enabled by means of BlueControl® (engineering tool) are visible and accessible by entry of the password adjusted by means of BlueControl (engineering tool). Individual parameters accessible without password must be copied to the extended operating level via BlueControl®.

All levels disabled via password are disabled only, if safety switch loc also is open

Factory setting: Safety switch **Loc** closed:
-all levels accessible without restriction,
-password PASS = OFF .

Safety switch Loc	Password entered with BluePort®	Function disabled or enabled with BluePort®	Access via the instrument front panel:
closed	OFF / password	disabled / enabled	**enabled**
open	OFF / password	disabled	**disabled**
open	OFF	enabled	**enabled**
open	Password	enabled	**enabled after password entry**

4 Configuration level

4.1 *Configuration survey*

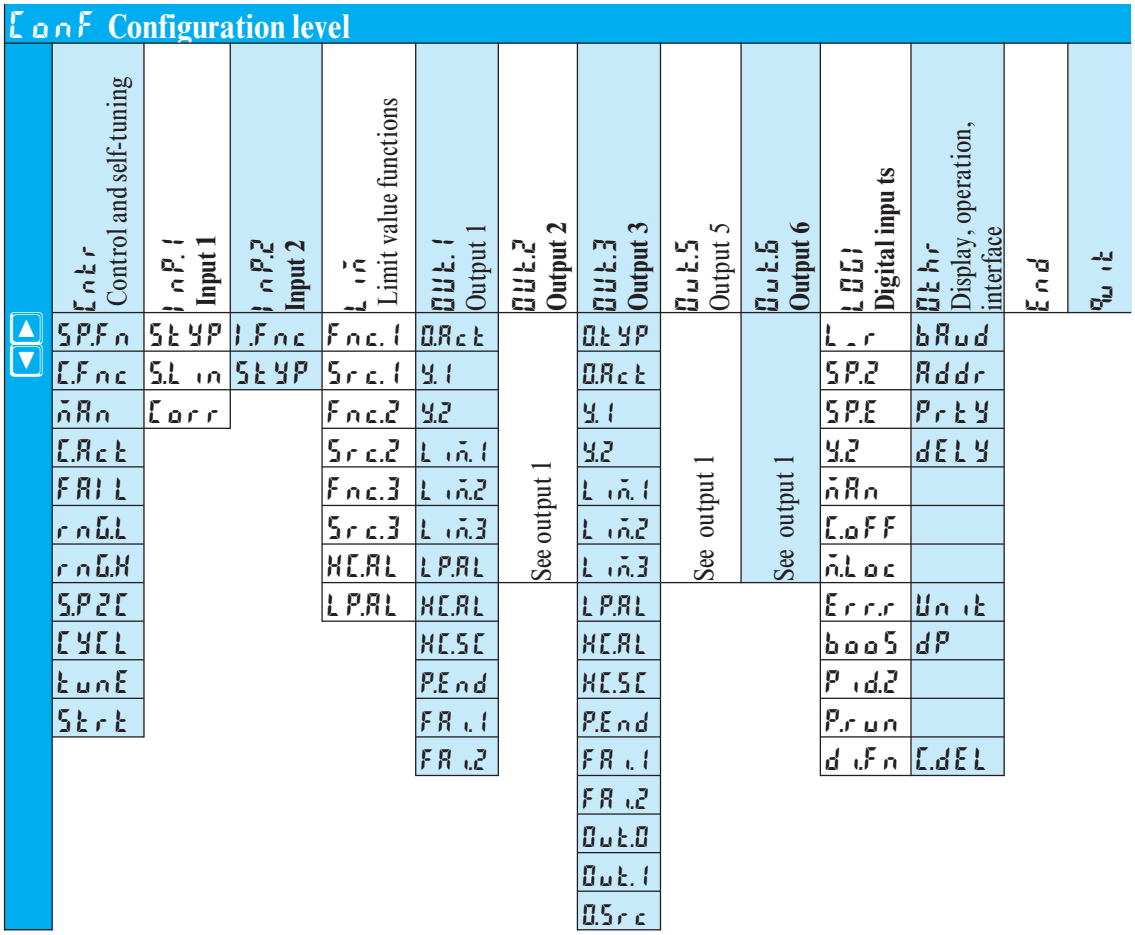

Adjustment:

- To access the configuration level, press the key ↵ for 3 seconds and then the key ▼ to select the ConF -Menu item. Press ↵ to confirm.

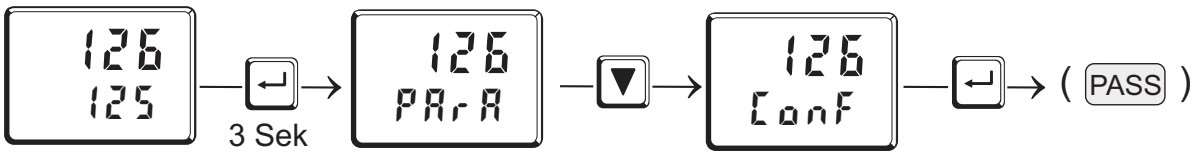

- If the password function is activated, a prompt for PASS is displayed.
- The configuration values can be adjusted using the ▲▼ - keys. Press the ↵ - key to save the value. The next configuration value is shown.
- After the last configuration value of a group, donE is displayed, followed by automatic changing to the next group

Return to the beginning of a group, by pressing the ↵ key for 3 sec.

Press menu item Quit to close/cancel configuration.

4.2 *Configurations*

CntR

Name	Value range	Description	Default
SP.Fn		**Basic configuration of setpoint processing**	0
	0	set-point controller can be switched over to external set-point (->LOGI / SP.E)	
	1	program controller	
	10	controller with start-up circuit	
	11	Fixpoint / SP.E-/ SP.2 -controller with start-up circuit	
C.Fnc		**Control behaviour (algorithm)**	1
	0	on/off controller or signaller with one output	
	1	PID controller (2-point and continuous)	
	2	Δ / Y / Off, or 2-point controller with partial/full load switch-over	
	3	2 x PID (3-point and continuous)	
	4	3-point stepping controller	
HAn		**Manual operation permitted**	0
	0	no	
	1	yes (see also LOGI /HAn)	
C.Act		**Method of controller operation**	0
	0	inverse, e.g. heating With decreasing process value, the correcting variable is increased, with increasing process value, the correcting variable is reduced.	
	1	direct, e.g. cooling With increasing process value, the correcting variable is increased, with decreasing process value, the correcting variable is decreased	
FAIL		**Behaviour at sensor break**	1
	0	controller outputs switched off	
	1	y = Y2	
	2	y = mean output. In the event of a failure of the input signal, the mean value of the correcting variable output last is kept. The maximum permissible output can be adjusted with parameter YH.H. To prevent determination of inadmissible values, mean value formation is only if the control deviation is lower than parameter L.YH.	
	3	y = mean output; manual adjustment is possible. In the event of a failure of the input signal, the mean value of the correcting variable output last is kept. The maximum permissible output can be adjusted using parameter YH.H . The mean output is measured at intervals of 1 min., when the control deviation is smaller than parameter L.YH.	
rnG.L	-1999...9999	**X0 (lower limit of control range)** indicates the smallest value to be expected as process value.	0
rnG.H	-1999...9999	**X100 (high limit range of control)** indicates the highest value to be expected as process value.	900
SP2C		**With active SP.2 no cooling controlling is provided**	0
	0	standard (cooling permissible with all set-points)	
	1	no cooling provided with active SP.2	

Name	Value range	Description	Default
CYCL		**Characteristic for 2-point- and 3-point-controllers**	0
	0	standard	
	1	water cooling linear	
	2	water cooling non-linear	
	3	with constant cycle	
tunE		**Auto-tuning at start-up**	0
	0	At start-up with step function	
	1	At start-up with impulse function. Setting for fast controlled systems (e.g. hot runner control)	
	2	Always step attempt during start-up	
Strt		**Start of auto-tuning**	0
	0	no automatic start (manual start via front interface)	
	1	Manual or automatic start of auto-tuning at power on or when oscillating is detected	
Adt0		**Optimization of T1, T2** (only visible with BlueControl!)	0
	0	Automatic optimization	
	1	No optimization	

InP.1

Name	Value range	Description	Default
S.TYP		**Sensor type selection**	1
	0	thermocouple type L (-100...900°C) , Fe-CuNi DIN	
	1	thermocouple type J (-100...1200°C) , Fe-CuNi	
	2	thermocouple type K (-100...1350°C), NiCr-Ni	
	3	thermocouple type N (-100...1300°C), Nicrosil-Nisil	
	4	thermocouple type S (0...1760°C), PtRh-Pt10%	
	5	thermocouple type R (0...1760°C), PtRh-Pt13%	
	20	Pt100 (-200.0 ... 100,0 °C)	
	21	Pt100 (-200.0 ... 850,0 °C)	
	22	Pt1000 (-200.0 ... 850.0 °C)	
	23	special 0...4500 Ohm (pre-defined as KTY11-6)	
	30	0...20mA / 4...20mA Scaling is required. (see chp.5.3 page 51)	
	40	0...10V / 2...10V Scaling is required. (see chp. 5.3 page 51)	
S.Lin		**Linearization (only at S.TYP = 23 (KTY 11-6), 30 (0..20mA) and 40 (0..10V) adjustable)**	0
	0	none	
	1	Linearization to specification. Creation of linearization table with BlueControl (engineering tool) possible. The characteristic for KTY 11-6 temperature sensors is preset.	
Corr		**Measured value correction / scaling**	0
	0	Without scaling	
	1	Offset correction (at CAL level)	
	2	2-point correction (at CAL level)	
	3	Scaling (at PArA level)	

Name	Value range	Description	Default
fAI1		**Forcing INP1** (only visible with BlueControl!)	0
	0	No forcing	
	1	Forcing via serial interface	

InP.2

Name	Value range	Description	Default
I.Fnc		**Function selection of INP2**	1
	0	no function (subsequent input data are skipped)	
	1	heating current input	
	2	external set-point (SP.E)	
	5	default correcting variable Y.E (switchover ->LOGI /Y.E)	
S.tYP		**Sensor type selection**	31
	30	0...20mA / 4...20mA Scaling is required. (see chp. 5.3 page 51)	
	31	0...50mA AC Scaling is required. (see chp.5.3 page51)	
fAI2		**Forcing INP2** (only visible with BlueControl!)	0
	0	No forcing	
	1	Forcing via serial interface	

Lim

Name	Value range	Description	Default
Fnc.1 Fnc.2 Fnc.3		**Function of limit 1/2/3**	1
	0	switched off	
	1	measured value monitoring	
	2	Measured value monitoring + alarm status storage. A stored limit value can be reset via error list, F -key, -key or a digital input (->LOGI /Err.r)	
Src.1 Src.2 Src.3		**Source of Limit 1/2/3**	1
	0	process value	
	1	control deviation xw (process value - set-point)	
	2	control deviation xw (with suppression after start-up and set-point change)	
	6	effective setpoint Weff	
	7	correcting variable y (controller output)	
	8	control variable deviation xw (actual value - internal setpoint) = deviation alarm to internal setpoint	
	11	Control deviation Xw (=relative alarm) with suppression after start-up or set-point change without time limit.	
HCAL		**Alarm heat current function (INP2)**	0
	0	switched off	
	1	Overload short circuit monitoring	
	2	Break and short circuit monitoring	
LPAL		**Monitoring of control loop interruption for heating**	0
	0	switched off / inactive	
	1	active If t.1=0 LOOP alarm is inactive!	

Name	Value range	Description	Default
Hour	OFF..999999	**Operating hours** (only visible with BlueControl!)	OFF
Swit	OFF..999999	**Output switching cycles** (only visible with BlueControl!)	OFF

Out.1

Name	Value range	Description	Default
O.Act		**Method of operation of output OUT1**	0
	0	direct / normally open	
	1	inverse / normally closed	
Y.1 Y.2		**Controller output Y1/Y2**	1
	0	not active	
	1	active	
L in.1 L in.2 L in.3		**Limit 1/2/3 signal**	0
	0	not active	
	1	active	
LP.AL		**Interruption alarm signal (LOOP)**	0
	0	not active	
	1	active	
HC.AL		**Heat current alarm signal**	0
	0	not active	
	1	active	
HC.SC		**Solid state relay (SSR) short circuit signal**	0
	0	not active	
	1	active	
P.End		**Programmer end signal**	0
	0	not active	
	1	active	
FA.1 FA.2		**INP1/ INP2 error signal**	0
	0	not active	
	1	active	
fOut		**Forcing OUT1** (only visible with BlueControl!)	0
	0	No forcing	
	1	Forcing via serial interface	

Out.2

Configuration parameters Out.2 as Out.1 except for: Default Y.1 = 0, Y.2 = 1

Out.3

Name	Value range	Description	Default
O.typ		**Signal type selection OUT3**	0
	0	relay / logic (only visible with current/logic voltage)	
	1	0 ... 20 mA continuous (only visible with current/logic/voltage)	
	2	4 ... 20 mA continuous (only visible with current/logic/voltage)	
	3	0...10 V continuous (only visible with current/logic/voltage)	
	4	2...10 V continuous (only visible with current/logic/voltage)	

Name	Value range	Description	Default
	5	transmitter supply (only visible without OPTION)	
O.Act		**Method of operation of output OUT3 (only visible when O.TYP=0)**	1
	0	direct / normally open	
	1	inverse / normally closed	
Y.1 Y.2		**Controller output Y1/Y2 (only visible when O.TYP=0)**	0
	0	not active	
	1	active	
Lim.1 Lim.2 Lim.3		**Limit 1/2/3 signal (only visible when O.TYP=0)**	1
	0	not active	
	1	active	
LP.AL		**Interruption alarm signal (LOOP) (only visible when O.TYP=0)**	0
	0	not active	
	1	active	
HC.AL		**Heating current alarm signal (only visible when O.TYP=0)**	0
	0	not active	
	1	active	
HC.SC		**Solid state relay (SSR) short circuit signal (only visible when O.TYP=0)**	0
	0	not active	
	1	active	
P.End		**Programmer end signal (only visible when O.TYP=0)**	0
	0	not active	
	1	active	
FA.1 FA.2		**INP1/ INP2 error (only visible when O.TYP=0)**	1
	0	not active	
	1	active	
Out.0	-1999...9999	**Scaling of the analog output for 0% (0/4mA or 0/2V, only visible when O.TYP=1..5)**	0
Out.1	-1999...9999	**Scaling of the analog output for 100% (20mA or 10V, only visible when O.TYP=1..5)**	100
O.Src		**Signal source of the analog output OUT3 (only visible when O.TYP=1..5)**	1
	0	not used	
	1	controller output y1 (continuous)	
	2	controller output y2 (continuous)	
	3	process value	
	4	effective set-point Weff	
	5	control deviation xw (process value - set-point)	
	6	No function	
fOut		**Forcing OUT3** (only visible with BlueControl!)	0
	0	No forcing	
	1	Forcing via serial interface	

Out.5 / Out.6

Configuration parameters Out.5 as Out.1 except for: Default Y.1 = 0, Y.2 = 0

Method of operation and usage of output Out.1 to Out.6:
Is more than one signal chosen active as source, those signals are OR-linked.

LOGI

Name	Value range	Description	Default
L.r		**Local / Remote switching (Remote: adjusting of all values by front keys is blocked)**	0
	0	no function (switch-over via interface is possible)	
	1	active	
	2	DI1	
	3	DI2 (only visible with OPTION)	
	4	DI3 (only visible with OPTION)	
	5	F - key	
SP.2		**Switching to second setpoint SP.2**	0
	0	no function (switch-over via interface is possible)	
	2	DI1	
	3	DI2 (only visible with OPTION)	
	4	DI3 (only visible with OPTION)	
	5	F - key	
SP.E		**Switching to external setpoint SP.E**	0
	0	no function (switch-over via interface is possible)	
	1	active	
	2	DI1	
	3	DI2 (only visible with OPTION)	
	4	DI3 (only visible with OPTION)	
	5	F - key	
Y2		**Y/Y2 switching**	0
	0	no function (switch-over via interface is possible)	
	2	DI1	
	3	DI2 (only visible with OPTION)	
	4	DI3 (only visible with OPTION)	
	5	F - key	
	6	- key	
YE		YE switch-over	0
	0	No function (switch-over via interface is possible)	
	1	always active	
	2	DI1 switches	
	3	DI2 switches (only visible with OPTION)	
	4	DI3 switches (only visible with OPTION)	
	5	F key switches	
	6	key switches	
nAn		**Automatic/manual switching**	0
	0	no function (switch-over via interface is possible)	
	1	always activated (manual station)	
	2	DI1	
	3	DI2 (only visible with OPTION)	
	4	DI3 (only visible with OPTION)	
	5	F - key	
	6	- key	

Name	Value range	Description	Default
C.oFF		**Switching off the controller**	0
	0	no function (switch-over via interface is possible)	
	2	DI1	
	3	DI2 (only visible with OPTION)	
	4	DI3 (only visible with OPTION)	
	5	F - key	
	6	- key	
n.Loc		**Blockage of hand function**	0
	0	no function (switch-over via interface is possible)	
	2	DI1	
	3	DI2 (only visible with OPTION)	
	4	DI3 (only visible with OPTION)	
	5	F - key	
Err.r		**Reset of all error list entries**	0
	0	no function (switch-over via interface is possible)	
	2	DI1	
	3	DI2 (only visible with OPTION)	
	4	DI3 (only visible with OPTION)	
	5	F - key	
	6	- key	
boo5		**Boost function: setpoint increases by SP.bo for the time t.bo**	0
	0	no function (switch-over via interface is possible)	
	2	DI1	
	3	DI2 (only visible with OPTION)	
	4	DI3 (only visible with OPTION)	
	5	F - key	
P id2		**Switching of parameter set (Pb, ti, td)**	0
	0	no function (switch-over via interface is possible)	
	2	DI1	
	3	DI2 (only visible with OPTION)	
	4	DI3 (only visible with OPTION)	
	5	F - key	
P.run		**Programmer Run/Stop (see page 55)**	0
	0	no function (switch-over via interface is possible)	
	2	DI1	
	3	DI2 (only visible with OPTION)	
	4	DI3 (only visible with OPTION)	
	5	F - key	
d.Fn		**Function of digital inputs (valid for all inputs)**	0
	0	direct	
	1	inverse	
	2	toggle key function	
fDI1 fDI2 fDI3		**Forcing di1/ di2 / di3** (only visible with BlueControl!)	0
	0	No forcing	
	1	Forcing via serial interface	

othr

Name	Value range	Description	Default
bAud		**Baudrate of the interface (only visible with OPTION)**	2
	0	2400 Baud	
	1	4800 Baud	
	2	9600 Baud	
	3	19200 Baud	
Addr	1...247	**Address on the interace (only visible with OPTION)**	1
PrtY		**Data parity on the interface (only visible with OPTION)**	1
	0	no parity (2 stop bits)	
	1	even parity	
	2	odd parity	
dELY	0...200	**Delay of response signal [ms] (only visible with OPTION)**	0
Unit		**Unit**	1
	0	without unit	
	1	°C	
	2	°F	
dP		**Decimal point (max. number of digits behind the decimal point)**	0
	0	no digit behind the decimal point	
	1	1 digit behind the decimal point	
	2	2 digits behind the decimal point	
	3	3 digits behind the decimal point	
LEd		**Function allocation of the status LEDs1 / 2 / 3**	0
	0	OUT1, OUT2, OUT3	
	1	Heating, Alarm 2, Alarm 3	
	2	Heating, Cooling, Alarm 3	
C.dEL	0..200	**Modem delay [ms]**	0
FrEq		**Switching 50 Hz / 60 Hz** (only visible with BlueControl!)	0
	0	50 Hz	
	1	60 Hz	
MASt		Modbus Master / Slave (only visible with BlueControl®!)	0
	0	No	
	1	Yes	
Cycl	0 ... 240	**Mastercycle (sec.) (only visible with BlueControl®!)**	120
Adr0	-32768 ... 32767	Destination address (only visible with BlueControl®!)	1100
AdrU	-32768 ... 32767	Source address (only visible with BlueControl®!)	1100
Numb	0 ... 100	Number of data (only visible with BlueControl®!)	1
ICof		**Block controller off** (only visible with BlueControl!)	0
	0	Released	
	1	Blocked	

Name	Value range	Description	Default
IAda		**Block auto tuning** (only visible with BlueControl!)	0
	0	Released	
	1	Blocked	
IExo		**Block extended operating level** (only visible with BlueControl!)	0
	0	Released	
	1	Blocked	
ILat		Suppression error storage (only visible with BlueControl®!)	0
	0	No	
	1	Yes	
Pass	OFF...9999	**Password** (only visible with BlueControl!)	OFF
IPar		**Block parameter level** (only visible with BlueControl!)	1
	0	Released	
	1	Blocked	
ICnf		**Block configuration level** (only visible with BlueControl!)	1
	0	Released	
	1	Block	
ICal		**Block calibration level** (only visible with BlueControl!)	1
	0	Released	
	1	Blocked	
F.Coff		Switch-off behaviour (only visible with BlueControl®!)	0
	0	PID - controller functions off	
	1	All functions off	
D2.Err		Error displayed in display 2 (only visible with BlueControl®!)	0
	0	No reaction to errors	
	1	Blinking error display	

Resetting the controller configuration to factory setting (Default)
→ **chapter 12.1 (page 68)**

BlueControl - the engineering tool for the BluePort® controller series

For facilitating configuration and parameter setting of the KS50/52-1 an engineering tool with different functionality levels is available (see chapter 10: *Accessory equipment with ordering information*).

In addition to configuration and parameter setting, BlueControl® is used for data acquisition and offers long-term storage and print functions. BlueControl® is connected to KS50/52-1 via the front-panel interface "BluePort®" by means of PC (Windows 95/ 98/ NT4/ 2000/ XP) and a PC adaptor.
Description BlueControl®: see chapter 9: *BlueControl* (page 60)

4.3 *Set-point processing*

The set-point processing structure is shown in the following picture:

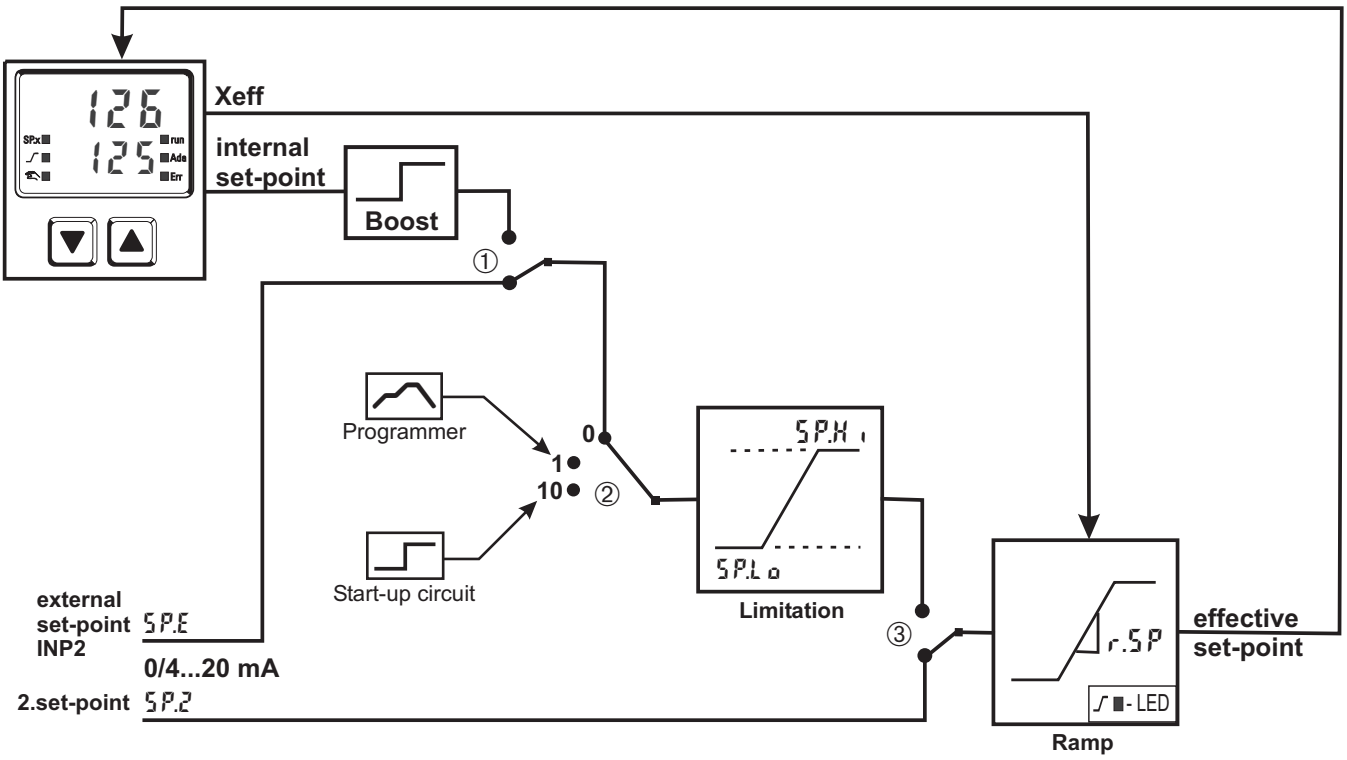

Index:

① : int/ext-setpoint switching
② : configuration SP.Fn
③ : SP / SP.2 switching

The ramp starts at process value with the following switchings:

- int / ext-setpoint switching
- SP / SP.2 switching
- Manual-/ Automatic switching
- at power on

4.3.1 Set-point gradient / ramp

To prevent set-point step changes, parameter r set-point r r.SP can be adjusted to a maximum rate of change. This gradientis effective in positive and negative direction..

With parameter r.SP set to OFF (default), the gradient is switched off and set-point changes are realized directly.
(for parameter: see page)

4.4 *KS50-1 cooling functions*

With KS50-1, configuration parameter CYCL (ConF / Entr / CYCL) can be used for matching the cycle time of 2-point and 3-point controllers. This can be done using the following 4 methods.

4.4.1 Standard (CYCL = 0)

The adjusted cycle times t1 and t2 are valid for 50% or -50% correcting variable. With very small or very high values, the effective cycle time is extended to

prevent unreasonably short on and off pulses. The shortest pulses result from ¼ x t1 or ¼ x t2. The characteristic curve is also called “bath tub curve”.

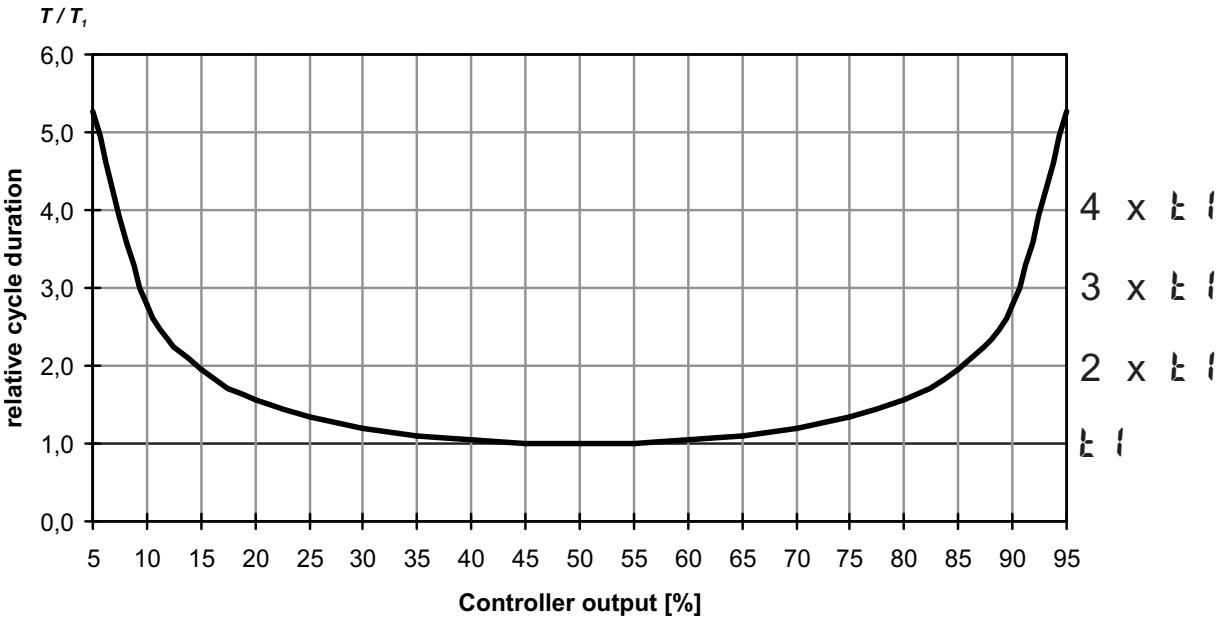

Parameters to be adjusted: (PArA/CntR)
t1 : min. cycle time 1 (heating) [s]
t2 : min. cycle time 2 (cooling) [s]

4.4.2 Switching attitude **linear (CYCL = 1)**

For heating (Y1), the standard method (see chapter 4.4.1) is used. For cooling (Y2), a special algorithm for cooling with water is used. Generally, cooling is enabled only at an adjustable process temperature (E.H2O), because low temperatures prevent evaporation with related cooling, whereby damage to the plant is avoided. The cooling pulse length is adjustable using parameter t.on and is fixed for all output values.
The “off” time is varied dependent of output value. Parameter t.oFF is used for determining the min “off” time. For output of a shorter off pulse, this pulse is suppressed, i.e. the max. effective cooling output value is calculated according to formula t.on / (t.on + t.oFF) • 100%.

Parameters to be adjusted: (PArA /CntR)
E.H2O: minimum temperature for water cooling
t.on: pulse duration water cooling
t.oFF: minimum pause water cooling

4.4.3 Switching attitude **non-linear (CYCL = 2)**

With this method, the cooling power is normally much higher than the heating power, i.e. the effect on the behaviour during transition from heating to cooling may be negative. The cooling curve ensures that the control intervention with 0 to -70% correcting variable is

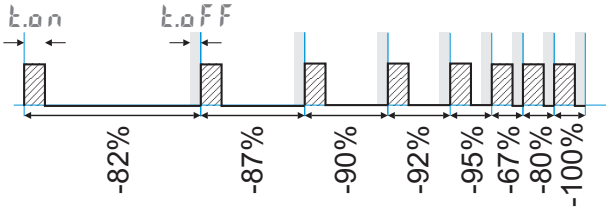

very weak. Moreover, the correcting variable increases very quickly to max. possible cooling. Parameter F.H20 can be used for changing the characteristic curve. The standard method (see section 4.4.1) is also used for heating. Cooling is also enabled dependent of process temperature .

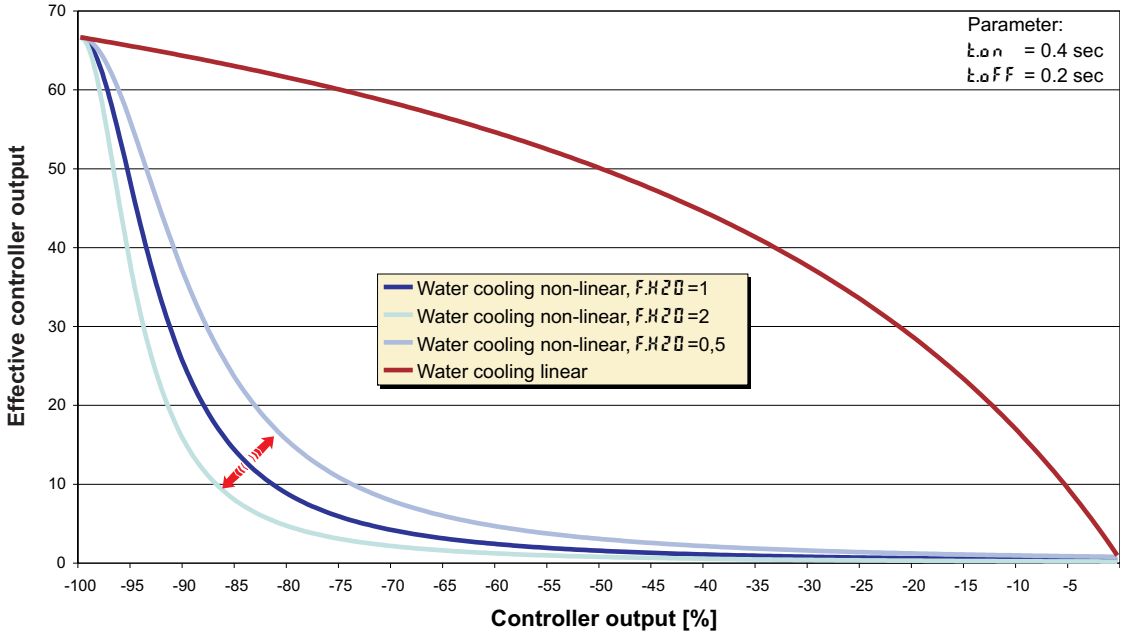

Parameters to be adjusted:
(PArA/Entr)

E.H20: min. temperature for water cooling
t.on: Pulse duration water cooling
t.oFF: min. pause water cooling
F.H20: adaptation of (non-linear) characteristic Water cooling

4.4.4 Heating and cooling with constant period (CYCL = 3)

The adjusted cycle times t1 and t2 are met in the overall output range . To prevent unreasonably short pulses, parameter tP is used for adjusting the shortest pulse duration. With small correcting values which require a pulse shorter than the value adjusted in tP, this pulse is suppressed. However, the controller stores the pulse and totalizes further pulses, until a pulse of duration tP can be output.

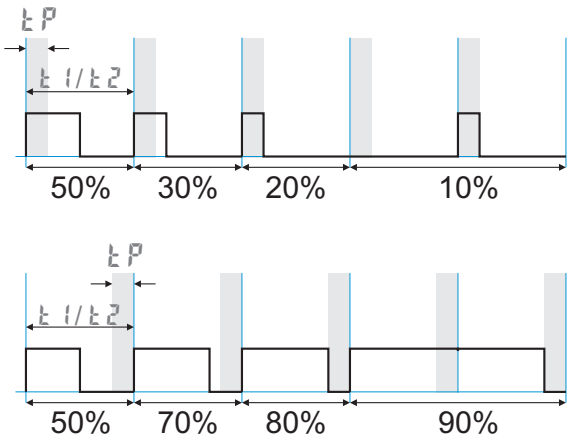

Parameters to be adjusted:
(PArA/Entr)

t1: Min. cycle time 1 (heating) [s]
t2: min. cycle time 2 (cooling) [s]
tP: min. pulse length [s]

4.5 *Configuration examples*

4.5.1 On-Off controller / Signaller (inverse)

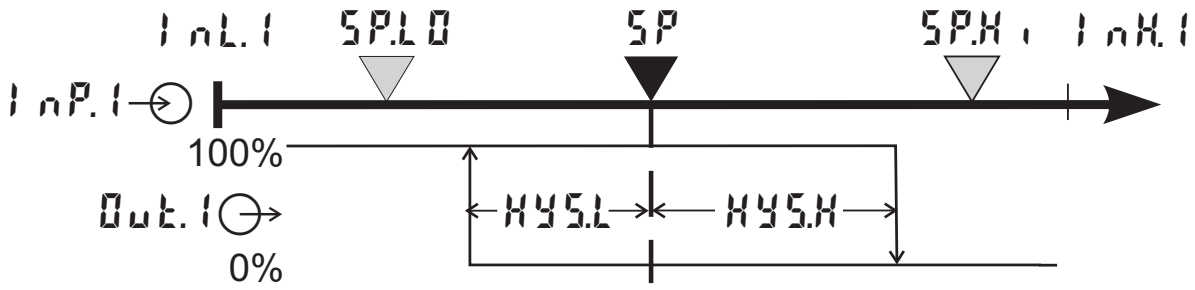

ConF / Cntr:	SP.Fn	= 0	set-point /cascade controller
	C.Fnc	= 0	signaller with one output
	C.Act	= 0	inverse output action (e.g. heating applications)
ConF / Out.1:	O.Act	= 0	output action Out.1 direct
	Y.1	= 1	control output Y1 active
PArA / Cntr:	HYS.L	= 0...9999	switching difference below SP
PArA / Cntr:	HYS.H	= 0...9999	switching difference above SP
PArA / SEtP:	SP.LO	= -1999...9999	lower set-point limit for Weff
	SP.HI	= -1999...9999	upper set-point limit for Weff

For direct signaller action, the controller action must be changed (ConF / Cntr / C.Act = 1)

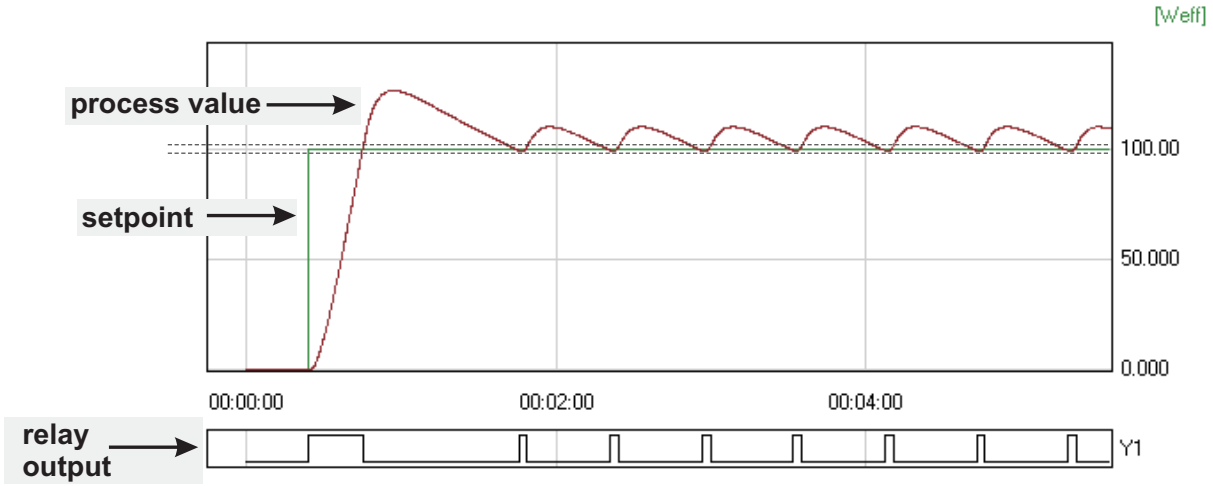

4.5.2 2-point and continuous controller (inverse)

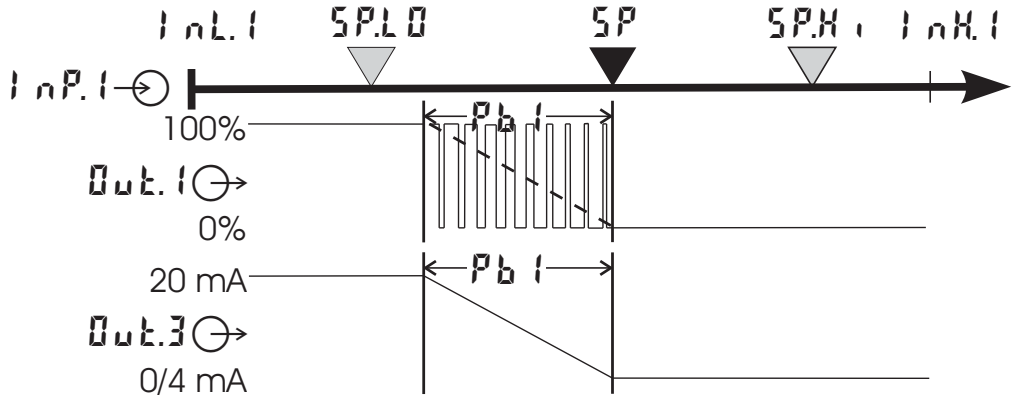

ConF/Cntr	SP.Fn	= 0	set-point / cascade controller
	C.Fnc	= 1	2-point and continuous controller (PID)
	C.Act	= 0	inverse action (e.g. heating applications)
ConF / Out.1:	O.Act	= 0	action Out.1 direct
	Y.1	= 1	control output Y1 active
ConF / Out.3:	O.typ	= 1 / 2	Out.3 Type (0/4 … 20mA)
	Out.0	= -1999...9999	scaling analog output 0/4mA
	Out.1	= -1999...9999	scaling analog output 20mA
	O.Src	= 1	controller output y1 (continuous)
PArA / Cntr:	Pb1	= 1...9999	proportional band 1 (heating) in units of phys. quantity (e.g. °C)
	t.1	= 0,1...9999	integral time 1 (heating) in sec.
	td1	= 0,1...9999	derivative time 1 (heating) in sec.
	t1	= 0,4...9999	min. cycle time 1 (heating)
PArA / SEtP:	SP.LO	= -1999...999	set-point limit low for Weff
	SP.HI	= -1999...9999	set-point limit high for Weff

For direct action, the controller action must be changed (ConF / Cntr / C.Act = 1).

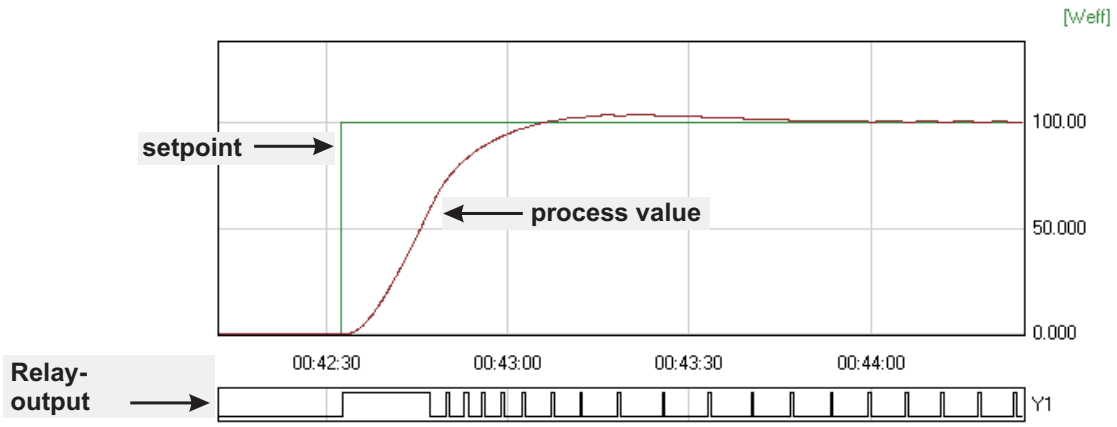

4.5.3 3-point and continuous controller

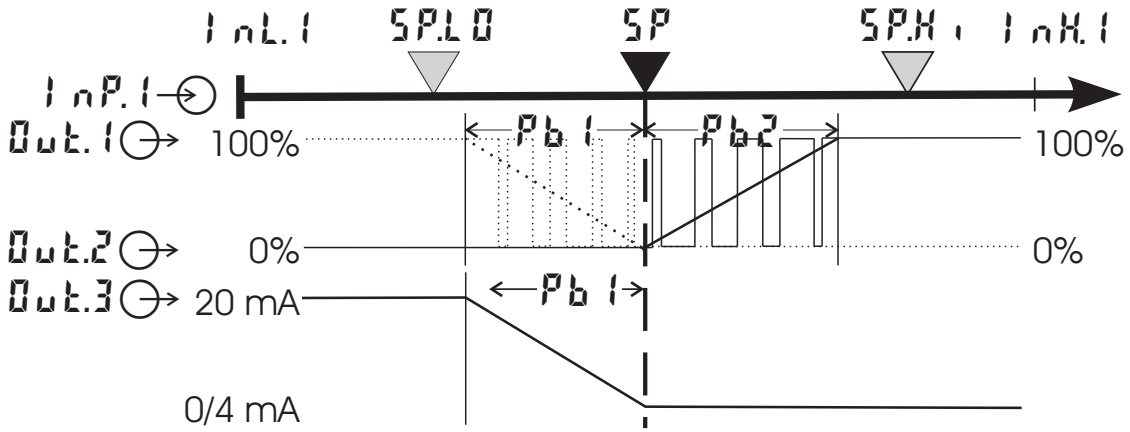

ConF / Entr:	SP.Fn	=	0	set-point / cascade controller
	C.Fnc	=	3	3-point controller (2xPID)
	C.Act	=	0	action inverse (e.g. heating applications)
ConF / Out.1:	O.Act	=	0	action Out.1 direct
	Y.1	=	1	control output Y1 active
	Y.2	=	0	control output Y2 not active
ConF / Out.2:	O.Act	=	0	action Out.2 direct
	Y.1	=	0	control output Y1 not active
	Y.2	=	1	control output Y2 active
ConF /Out.3:	O.typ	=1 / 2		0 ... 20 mA continuous. / 4 ... 20 mA
	Out.0	=	0	scaling 0 %
	Out.1	=	100	scaling 100 %
	O.Src	=	1	controller output y1 (continuous)
PArA / Entr:	Pb1	=	0,1...9999	proportional band 1 (heating) in units of phys. quantity (e.g. °C)
	Pb2	=	0,1...9999	proportional band 2 (cooling) in units of phys. quantity (e.g. °C)
	t.1	=	1...9999	integral time 1 (heating) in sec.
	t.2	=	1...9999	derivative time 2 (cooling) in sec.
	td1	=	1...9999	integral time 1 (heating) in sec.
	td2	=	1...9999	derivative time 2 (cooling) in sec.
	t1	=	0,4...9999	min. cycle time 1 (heating)
	t2	=	0,4...9999	min. cycle time 2 (cooling)
	SH	=	0...9999	neutr. zone in units of phys.quantity
PArA / SEtP:	SP.LO	=	-1999...9999	set-point limit low for Weff
	SP.H	=	-1999...9999	set-point limit high for Weff

4.5.4 3-point stepping controller (relay & relay)

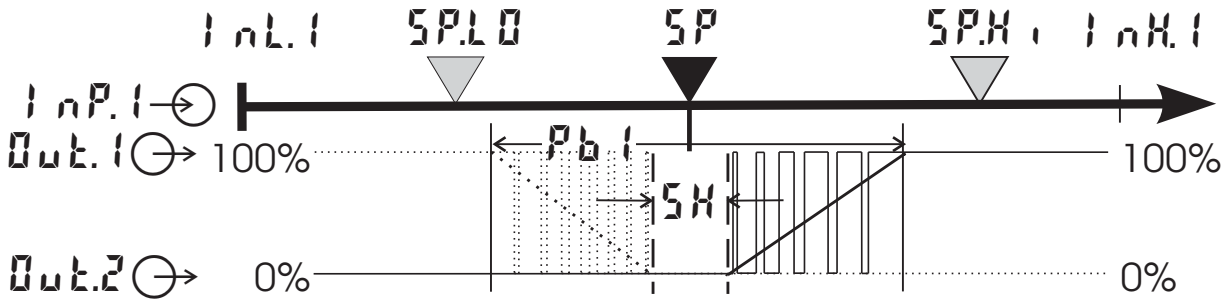

ConF / Cntr:	SP.Fn	=	0	set-point / cascade controller
	C.Fnc	=	4	3-point stepping controller
	C.Act	=	0	inverse action (e.g. heating applications)
ConF / Out.1:	O.Act	=	0	action Out.1 direct
	Y.1	=	1	control output Y1 active
	Y.2	=	0	control output Y2 not active
ConF / Out.2:	O.Act	=	0	action Out.2 direct
	Y.1	=	0	control output Y1 not active
	Y.2	=	1	control output Y2 active
PArA / Cntr:	Pb1	=	0,1...9999	proportional band 1 (heating) in units of phys. quantity (e.g. °C)
	tn1	=	1...9999	integral time 1 (heating) in sec.
	td1	=	1...9999	derivative time 1 (heating) in sec.
	t1	=	0,4...9999	min. cycle time 1 (heating)
	SH	=	0...9999	neutral zone in units of phy. quantity
	tP	=	0,1...9999	min. pulse length in sec.
	tt	=	3...9999	actuator travel time in sec.
PArA / SEtP:	SP.LO	=	-1999...9999	set-point limit low for Weff
	SP.HI	=	-1999...9999	set-point limit high for Weff

For direct action of the 3-point stepping controller, the controller output action must be changed (ConF / Cntr / C.Act = 1).

4.5.5 Δ Z Y - Off controller / 2-point controller with pre-contact

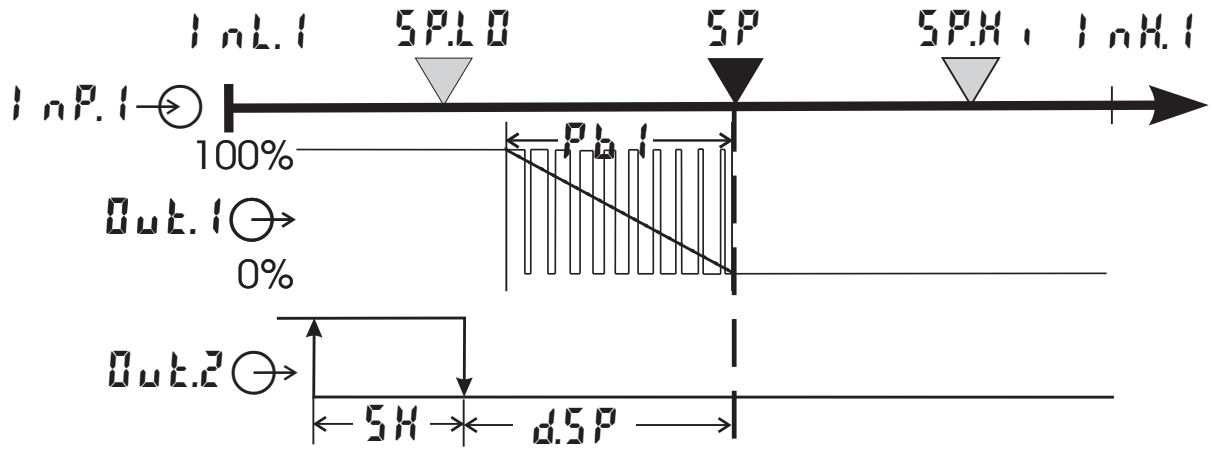

ConF / Entr:	SP.Fn	=	0	set-point / cascade controller
	C.Fnc	=	2	Δ -Y-Off controller
	C.Act	=	0	inverse action (e.g. heating applications)
ConF / Out.1:	O.Act	=	0	action Out.1 direct
	Y.1	=	1	control output Y1 active
	Y.2	=	0	control output Y2 not active
ConF / Out.2:	O.Act	=	0	action Out.2 direct
	Y.1	=	0	control output Y1 not active
	Y.2	=	1	control output Y2 active
PArA / Entr:	Pb1	=	0,1...9999	proportional band 1 (heating) in units of phys. quantity (e.g. °C)
	t.1	=	1...9999	integral time 1 (heating) in sec.
	td1	=	1...9999	derivative time 1 (heating) in sec.
	t1	=	0,4...9999	min. cycle time 1 (heating)
	SH	=	0...9999	switching difference
	d.SP	=	-1999...9999	trigg. point separation suppl. cont. Δ / Y / Off in units of phys. quantity
PArA / SEtP:	SP.LO	=	-1999...9999	set-point limit low for Weff
	SP.HI	=	-1999...9999	set-point limit high for Weff

4.5.6 KS5_-1 with measured value output

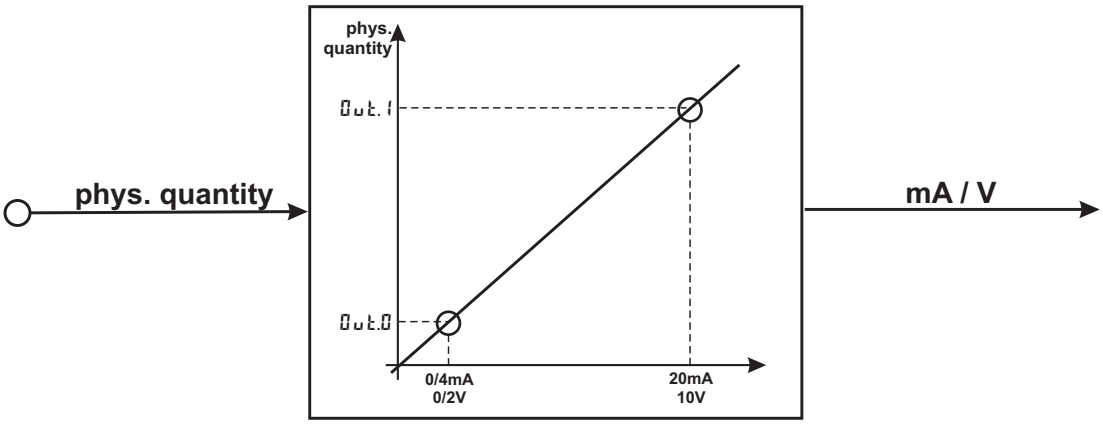

Example: KS5_-1_2-_00_ _-_ _ _

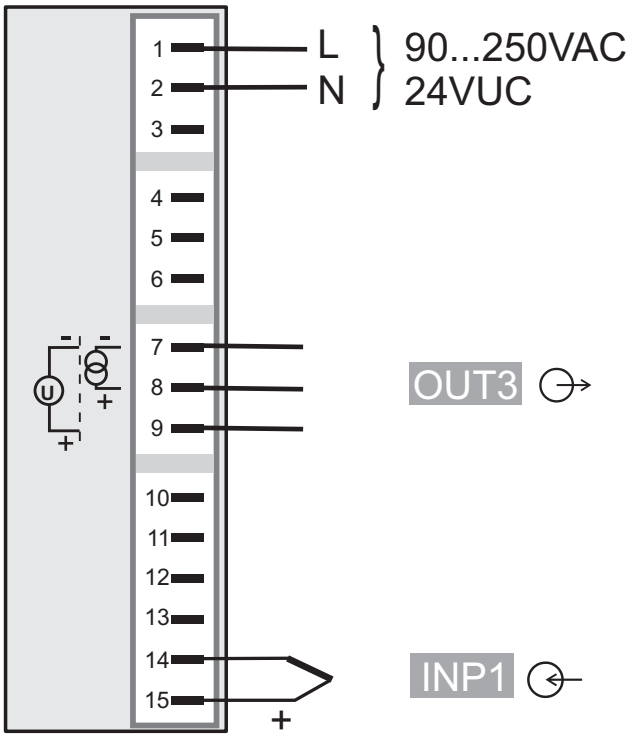

ConF / Out.3:	Out.TYP	= 1	Out.3 0...20mA continuous
		= 2	Out.3 4...20mA continuous
		= 3	Out.3 0...10V continuous
		= 4	Out.3 2...10V continuous
	Out.0	= -1999...9999	scaling Out.3 for 0/4mA or 0/2V
	Out.1	= -1999...9999	scaling Out.3 for 20mA or 10V
	Out.Src	= 3	signal source for Out.3 is the process value

5 Parameter setting level

5.1 *Parameter survey*

PArA Parameter setting level							
Entr Control and self-tuning	PAr.2 2. set of parameters	SEtP Set-point and process value	Prog Programmer	inP.1 Input 1	inP.2 Input 2	Lim Limit value functions	End
Pb1	Pb12	SP.Lo	b.Lo	InL.1	InL.2	L.1	
Pb2	Pb22	SP.Hi	b.Hi	OuL.1	OuL.2	H.1	
ti1	ti12	SP.2	SP.01	InH.1	InH.2	HYS.1	
ti2	ti22	r.SP	Pt.01	OuH.1	OuH.2	dEL.1	
td1	td12	SP.bo	SP.02	tF.1		L.2	
td2	td22	t.bo	Pt.02			H.2	
t1		Y.St	SP.03			HYS.2	
t2		SP.St	Pt.03			dEL.2	
SH		t.St	SP.04			L.3	
HYS.L			Pt.04			H.3	
HYS.H			SP.05			HYS.3	
d.SP			Pt.05			dEL.3	
tP			SP.06			HC.A	
tt			Pt.06				
Y2			SP.07				
Y.Lo			Pt.07				
Y.Hi			SP.08				
Y0			Pt.08				
Y.nH			SP.09				
t.Yn			Pt.09				
Ex20			SP.10				
t.on			Pt.10				
t.oFF							
Fn2o							

Adjustment:

To access the parameter level, press the key ↵ for 3 seconds and confirm using the ↵ -key subsequently. If the password function is activated, the prompt for the PASS is displayed



- The parameters can be adjusted using the ▲▼ - keys.

- Press the ↵ - key to change to the next parameter.
- After the last parameter of a group, donE is displayed and followed by automatic changing to the next group

Return to the beginning of a group, by pressing the ↵ key for 3 sec.

Unless a key is pressed during 30 seconds, the controller returns to the process value and setpoint display (Time Out = 30 sec.)

Resetting the configuration parameters to default
→ chapter 12.1 (page 68)

5.2 *Parameters*

Cntr

Name	Value range	Description	Default
Pb1	1...9999 ❶	Proportional band 1 (heating) in phys. dimensions (e.g. °C)	100
Pb2	1...9999 ❶	Proportional band 2 (cooling) in phys. dimensions (e.g. °C)	100
t.1	1...9999	Integral action time 1 (heating) [s]	180
t.2	1...9999	Integral action time 2 (cooling) [s]	180
td1	1...9999	Derivative action time 1 (heating) [s]	180
td2	1...9999	Derivative action time 2 (cooling) [s]	180
t1	0,4...9999	Minimal cycle time 1 (heating) [s]. The minimum impulse is 1/4 x t1	10
t2	0,4...9999	Minimal cycle time 2 (cooling) [s]. The minimum impulse is 1/4 x t2	10
SH	0...9999	Neutral zone or switching differential for on-off control [phys. dimensions)	2
d.SP	-1999...9999	Trigger point seperation for additional contact Δ / Y / Off [phys. dimensions]	100
tP	0,1...9999	Minimum impulse [s]	OFF
tt	3...9999	Motor travel time [s]	60
y2	-120...120	2. correcting variable	0
y.Lo	-120...120	Lower output limit [%]	0
y.H.	-120...120	Upper output limit [%]	100
y.0	-120...120	Working point for the correcting variable [%]	0
yn.H	-120...120	Limitation of the mean value Ym [%]	5
L.yn	0...9999	Max. deviation xw at the start of mean value calculation [phys. dimensions]	8
E.H20	-1999...9999	Min. temperature for water cooling. Below the set temperature no water cooling happens.	120
t.on	0,1...9999	Impulse lenght for water cooling. Fixed for all values of controller output.The pause time is varied.	0,1
t.oFF	1...9999	Min. pause time for water cooling. The max. effective controller output results from t.on /(t.on +t.oFF)•100%	2
F.H20	0,1...9999	Modification of the (non-linear) water cooling characteristic (see page 39)	0,5

❶ Valid for ConF / othr / dP = 0. With dP = 1 / 2 / 3 also 0,1 / 0,01 / 0,001 is possible.

PAr.2

Name	Value range	Description	Default
Pb 12	1...9999 ❶	Proportional band 1 (heating) in phys. dimensions (e.g. °C), 2. parameter set	100
Pb22	1...9999 ❶	Proportional band 2 (cooling) in phys. Dimensions (e.g. °C), 2. parameter set	100
t i22	0...9999	Integral action time 2 (cooling) [s], 2. parameter set	180
t i12	0...9999	Integral action time 1 (heating) [s], 2. parameter set	180
td12	0...9999	Derivative action time 1 (heating) [s], 2. parameter set	180
td22	0...9999	Derivative action time 2 (cooling) [s], 2. parameter set	180

SEtP

Name	Value range	Description	Default
SP.LO	-1999...9999	Set-point limit low for Weff	0
SP.H i	-1999...9999	Set-point limit high for Weff	900
SP.2	-1999...9999	Set-point 2.	0
r.SP	0...9999	Set-point gradient [/min]	OFF
SP.bo	-1999...9999	Boost set-point	30
t.bo	0...9999	Boost time	10
Y.St	-120...120	Start-up setpoint (see page 56)	20
SP.St	-1999...9999	Set-point for start-up	95
t.St	0...9999	Start-up hold time (see page 56)	10
SP	-1999...9999	Set-point (only visible with BlueControl!)	0

SP.Lo and SP.H i should be between the limits of rnGH and rnGL see configuration r controller page 29

ProG

Name	Value range	Description	Default
SP.01	-1999...9999	Segment end set-point 1	100 ❶
Pt.01	0...9999	Segment time 1 [min]	10 ❷
SP.02	-1999...9999	Segment end set-point 2	100 ❶
Pt.02	0...9999	Segment time 2 [min]	10 ❷
SP.03	-1999...9999	Segment end set-point 3	200 ❶
Pt.03	0...9999	Segment time 3 [min]	10 ❷
SP.04	-1999...9999	Segment end set-point 4	200 ❶
Pt.04	0...9999	Segment time 4 [min]	10 ❷

❶ If SP.01 ... SP.04 = OFF then following parameters are not shown

❷ If segment end set-point = OFF then the segment time is not visible

InP.1

Name	Value range	Description	Default
InL.1	-1999...9999	Input value for the lower scaling point	0
OuL.1	-1999...9999	Displayed value for the lower scaling point	0
InH.1	-1999...9999	Input value for the upper scaling point	20
OuH.1	-1999...9999	Displayed value for the lower scaling point	20
t.F 1	-1999...9999	Filter time constant [s]	0,5

InP.2

Name	Value range	Description	Default
InL.2	-1999...9999	Input value for the lower scaling point	0
OuL.2	-1999...9999	Displayed value for the lower scaling point	0
InH.2	-1999...9999	Input value for the upper scaling point	50
OuH.2	-1999...9999	Displayed value for the upper scaling point	50

Lim

Name	Value range	Description	Default
L.1	-1999...9999	Lower limit 1	-10
H.1	-1999...9999	Upper limit 1	10
HYS.1	0...9999	Hysteresis limit 1	1
L.2	-1999...9999	Lower limit 2	OFF
H.2	-1999...9999	Upper limit 2	OFF
HYS.2	0...9999	Hysteresis limit 2	1
L.3	-1999...9999	Lower limit 3	OFF
H.3	-1999...9999	Upper limit 3	OFF
HYS.3	0...9999	Hysteresis limit 3	1
HC.A	-1999...9999	Heat current limit [A]	50

5.3 *Input scaling*

When using current or voltage signals as input variables for `InP.1` or `InP.2`, scaling of input and display values at parameter setting level is required. Specification of the input value for lower and higher scaling point is in the relevant electrical unit (mA/ V).

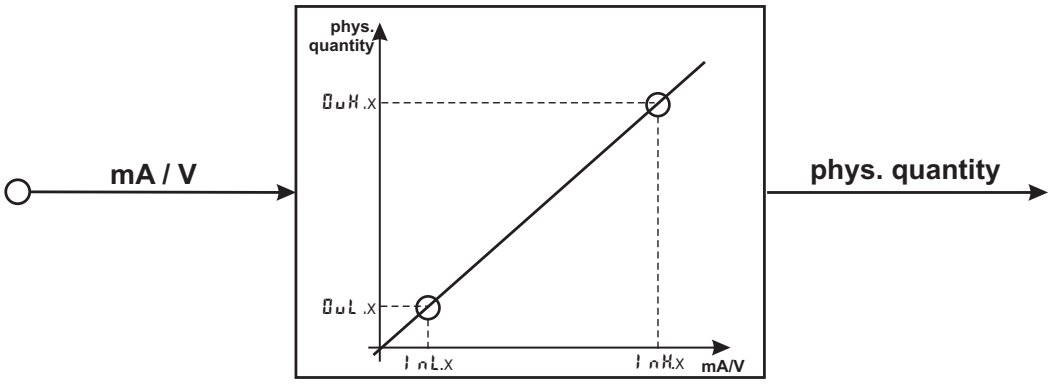

5.3.1 Input `InP.1`

Parameters `InL.1` , `OuL.1`, `InH.1` and `OuH.1` are only visible if `ConF` / `InP.1` / `Corr` = `3` is chosen.

`SEnS`	Input signal	`InL.1`	`OuL.1`	`InH.1`	`OuH.1`
30 (0...20mA)	**0 … 20 mA**	0	-1999...9999	20	-1999...9999
	4 … 20 mA	4	-1999...9999	20	-1999...9999
40 (0...10V)	**0 … 10 V**	0	-1999...9999	10	-1999...9999
	2 … 10 V	2	-1999...9999	10	-1999...9999

In addition to these settings, `InL.1` and `InH.1` can be adjusted in the range (0...20mA / 0...10V) determined by selection of `SEnS` .

For using the predetermined scaling with thermocouple and resistance thermometer (Pt100), the settings of `InL.1` and `OuL.1` as well as of `InH.1` and `OuH.1` must correspond.

5.3.2 Input `InP.2`

`SEnS`	Input signal	`InL.2`	`OuL.2`	`InH.2`	`OuH.2`
30	**0 … 20 mA**	0	-1999...9999	20	-1999...9999
31	**0 … 50 mA**	0	-1999...9999	50	-1999...9999

In addition to these settings, `InL.2` and `InH.2` can be adjusted in the range (0...20/ 50mA) determined by selection of `SEnS` .

6 Calibration level

Measured value correction (CAL) is visible only if
CONF / INP.1 / CORR = 1 or 2 is selected.

- To access the calibration level, press the key ↵ for 3 seconds and then the key ▼ ←↕ select the CAL -Menu item. Press ↵ to confirm.
- If the password function is activated, a prompt for the PASS is displayed.

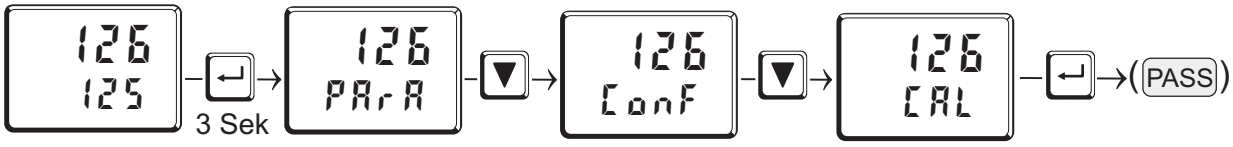

In the calibration menu (CAL), the measured value can be adapted. Two methods are available :

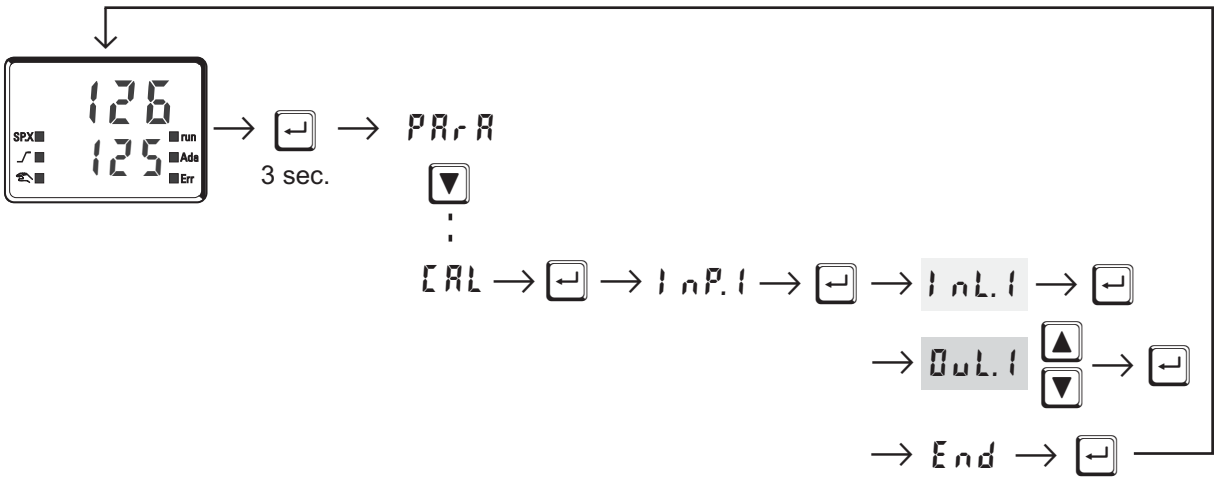

Offset correction **(CONF / INP.1 / CORR = 1):**

INL.1: The input value of the scaling point is displayed.
The operator must wait, until the process is at rest.
Subsequently, the operator acknowledges the input value by pressing key ↵.

OUL.1: The display value of the scaling point is displayed.
Before calibration, OUL.1 is equal to INL.1. The operator can correct the display value by pressing keys ▲▼ .
Subsequently, he confirms the display value by pressing key ↵.

Offset correction (ConF / InP.1 / Corr = 1):
possible on-line at the process

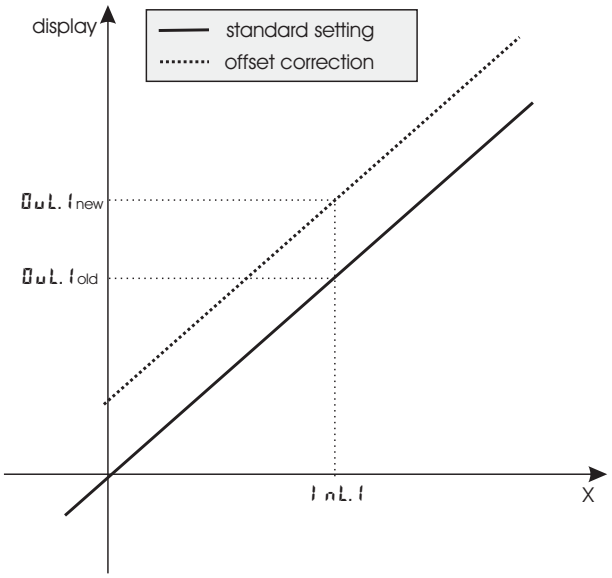

2-point correction (ConF / InP.1 / Corr = 2):

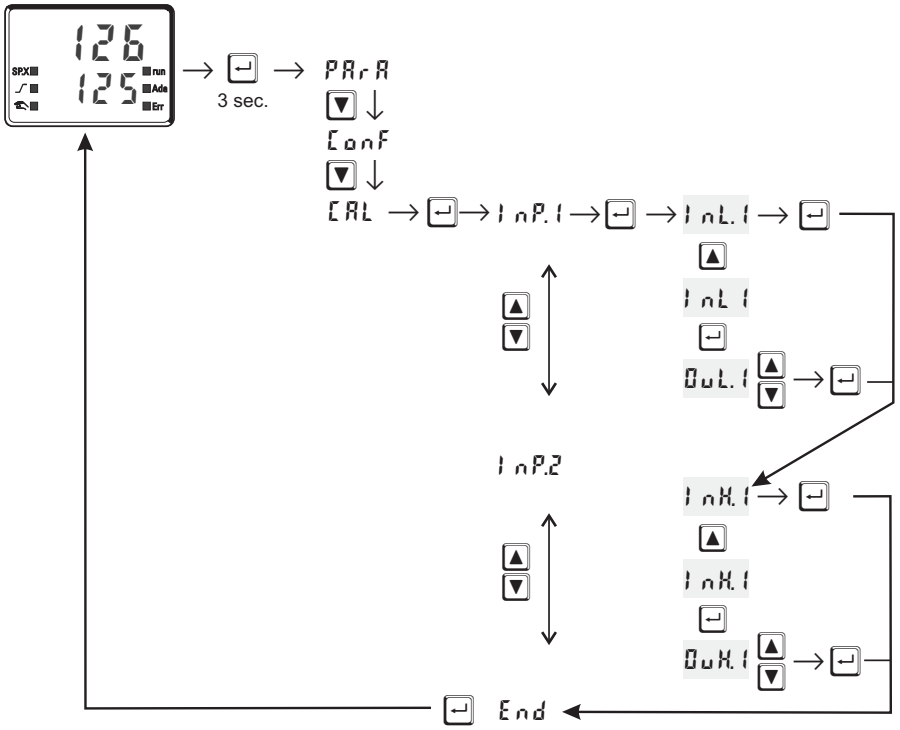

InL.1: The input value of the lower scaling point is displayed.
The operator must adjust the lower input value by means of a process value simulator and confirm the input value by pressing key ↵.

OuL.1: The display value of the lower scaling point is displayed.
Before calibration, OuL.1 is equal to InL.1.
The operator can correct the lower display value by pressing the ▲▼ keys. Subsequently, he confirms the display value by pressing key ↵.

InH.1: The input value of the upper scaling point is displayed. .
The operator must adjust the upper input value by means of the process value simulator and confirm the input value by pressing key ↵.

OuH.1: The display value of the upper scaling point is displayed.
Before calibration OuH.1 is equal to InH.1.
The operator can correct the upper display value by pressing keys ▲▼
Subsequently, he confirms the display value by pressing key ↵.

2-point correction **(ConF / InP.1 / Corr = 2):**
is possible off-line with process value simulator

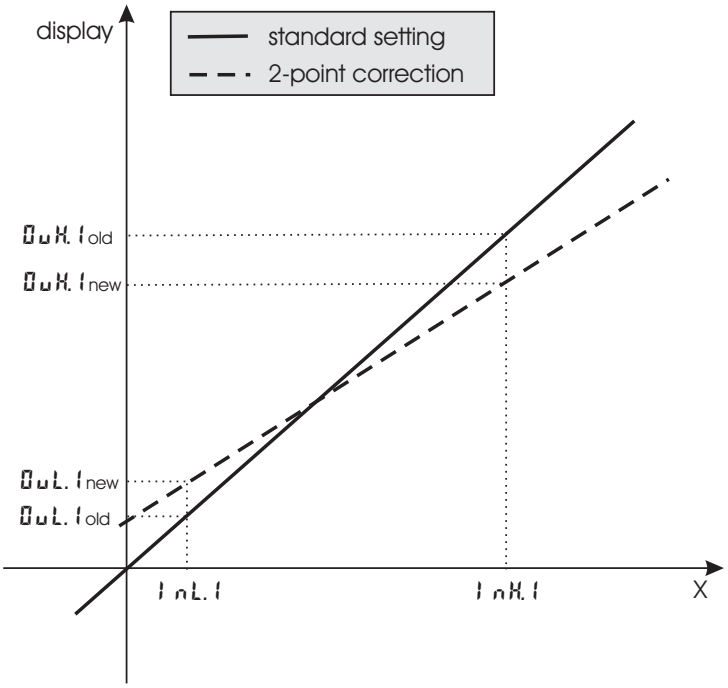

The parameters (OuL.1, OuH.1) altered at CAL level can be reset by decreasing them below the lowest adjustment value (OFF) using the decrement key ▼ .

7 Programmer

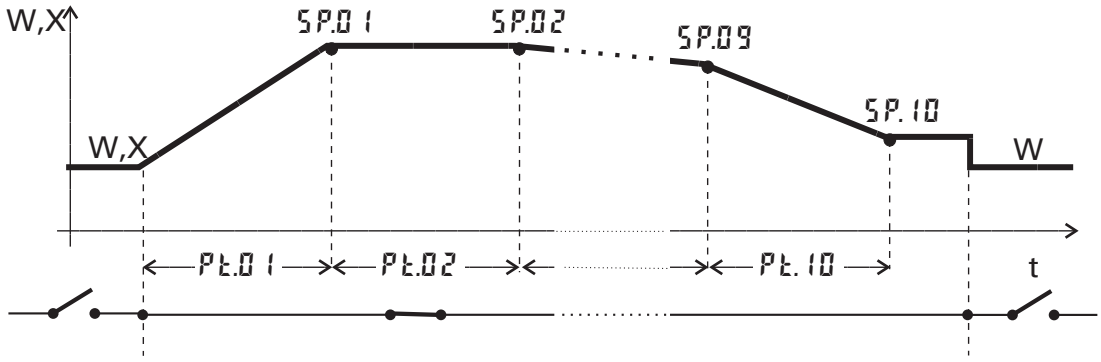

Programmer set-up:
For using the controller as a programmer, select parameter Cntr /SP.Fn = 1 in the ConF menu. The programmer is started via one of digital inputs di1..3 or the F key. Which input shall be used for starting the programmer is determined by selecting parameter LOGI /P.run = 2 / 3 / 4 / 5 in the ConF menu accordingly. For assigning the program end as a digital signal to one of the relay outputs, parameter P.End = 1 must be selected for the relevant output OUt.1...OUt.3 in the ConF menu.

Programmer parameter setting:
A programmer with 4 segments is available to the user. Determine a segment duration Pt.01 .. Pt.04 (in minutes) and a segment target set-point SP.01 .. SP.04 for each segment in the PArA menu.

Starting/stopping the programmer:
Starting the programmer is done by a digital signal at input di1..3 or the F key selected by parameter P.run. The programmer calculates a gradient from segment end setpoint and segment time.

This gradient is always valid. Normally, the programmer starts the first segment at process value. Because of this the effective run-time of the first segment may differ from the at PArA level setted segment time (process value ≠ setpoint). After program end, the controller continues controlling with the target set-point set last. If the program is stopped during execution (signal at digital input di1..3 or the F key is taken away), the programmer returns to program start and waits for a new start signal.

Program parameter changing while the program is running is possible.

Changing the segment time:
Changing the segment time leads to re-calculation of the required gradient. When the segment time has already elapsed, starting with the new segment is done directly, where the set-point changes stepwisely.

Changing the segment end setpoint:
Changing the set-point leads to re-calculation of the required gradient, in order to reach the new set-point during the segment rest time, whereby the required gradient polarity sign can change.

8 Special functions

8.1 *Start-up circuit*

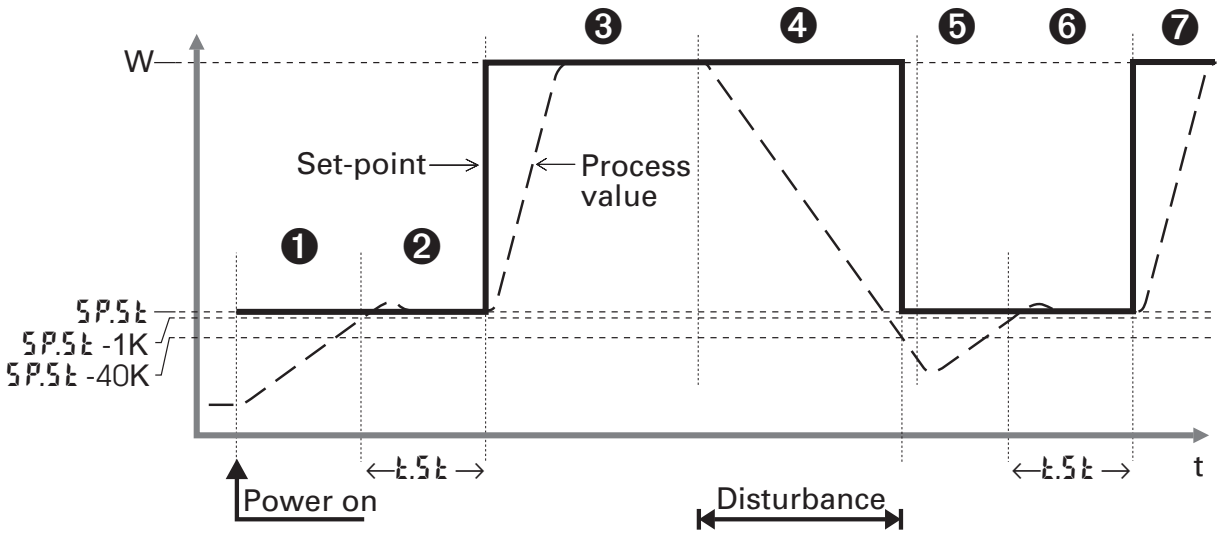

The start-up circuit is a special function for temperature control, e.g. hot runner control. High-performance heating cartridges with magnesium oxyde insulation material must be heated slowly to remove moisture and prevent destruction.

Operating principle:

❶ After switching on the supply voltage, line-out to the start-up set-point SP.St is using a maximum start-up correcting value of Y.St .

❷ The start-up holding time t.St is started one K below the start-up set-point (SP.St -1K).

❸ Subsequenlyt, the process is lined out to set-point W.

❹ If the process value drops by more than 40 K below the start-up set-point (SP.St -40K) due to a disturbance, the start-up procedure is re-started (❺, ❻, ❼).

With W < SP.St , W is used as set-point. The start-up holding time t.St is omitted.

If the gradient function (PArA / SEtP / r.SP ≠ OFF) was selected, start-up value SP.St is reached with the adjusted gradient r.SP .

With the boost function (see chapter 8.2) selected, W is increased by SP.bo during time t.bo .

The following settings can be selected:

SP.Fn = 10 set-point + start-up circuit
The start-up circuit is effective only with the internal set-point.

SP.Fn = 11 set-point, SP.E /SP.2 + start-up circuit
The start-up circuit is effective also with the external set-point SP.E and the 2nd set-point SP.2.

8.2 *Boost function*

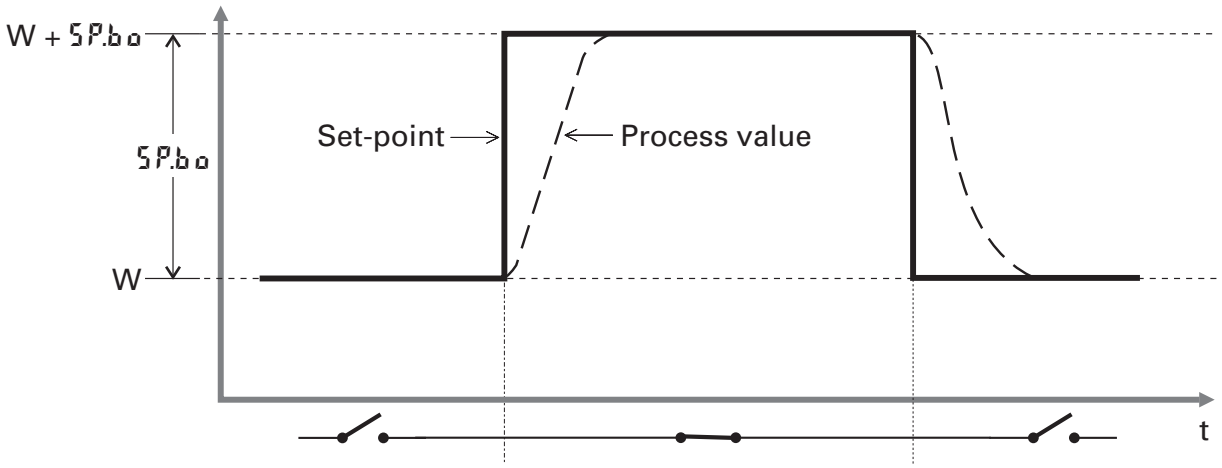

The boost function causes short-time increase of the set-point, e.g. for removing "frozen" material rests from clogged die nozzles with hot-runner control.

If configured (→ ConF / LOGI / booS), the boost function can be started via digital input di1/2/3, with the function key on the instrument front panel or via the interface (OPTION).

The set-point increase around boost set-point PArA /SEtP /SP.bo remains effective as long as digital signal (di1/2 3, function key, interface) remains set. The maximum permissible cycle time (boost time-out) is determined by parameter PArA /SEtP /t.bo .
Unless reset after elapse of boost time I t.bo , the boost function is finished by the controller.

The boost function also works with

- start-up circuit: PArA /SEtP / SP.bo is added to W after elapse of start-up holding time PArA /SEtP / t.St.
- Gradient function: set-point W is increased by PArA /SEtP / SP.bo with gradient PArA /SEtP / r.SP .

8.3 *KS50/52-1 as Modbus master*

This function is only selectable with BlueControl (engineering tool)!

Additions othr *(only visible with BlueControl!)*

Name	Value range	Description	Default
MASt		**Controller is used as Modbus master**	0
	0	Slave	
	1	Master	
Cycl	0...200	Cycle time [ms] for the Modbus master to transmit its data to the bus.	60
AdrO	1...65535	Target address to which the with **AdrU** specified data is given out on the bus.	1
AdrU	1...65535	Modbus address of the data that Modbus master gives to the bus.	1
Numb	0...100	Number of data that should be transmitted by the Modbus master.	0

The controller can be used as Modbus master (Conf / othr / **MASt** = 1). The Modbus master sends ist data to all slaves (broadcast message, controller adress 0). It transmits its data (modbus adress **AdrU**) cyclic with the cycle time **Cycl** to the bus. The slave controller receives the data transmitted by the masters and allocates it to the modbus target adress **AdrO**.

If more than one data should be transmitted by the master controller (**Numb** > 1) , the modbus adress **AdrU** indicates the start adress of the data that should be transmitted and **AdrO** indicates the first target adress where the received data should be stored. The following data will be stored at the logically following modbus target adresses.

With this it is possible e.g. to specify the process value of the master controller as set-point for the slave controllers.

8.4 *Linearization*

Linearization for input INP1

Access to table "L in" is always with selection of sensor type S.TYP = 18: special thermocouple in INP1, or with selection of linearization S.L in 1: special linearization.

Dependent of input type, the input signals are specified in µV or in Ohm dependent of input type.

With up to 16 segment points, non-linear signals can be simulated or linearized. Every segment point comprises an input (In.1 … In.16) and an output (Ou.1 … Ou.16). These segment points are interconnected automatically by means of straight lines.

The straight line between the first two segments is extended downwards and the straight line between the two largest segments is extended upwards.

I.e. a defined output value is also provided for each input value.

When switching an In.x value to OFF, all other ones are switched off.

Condition for these configuration parameters is an ascending order.

In.1 < In.2 < ...< In.16 and Ou.1 < Ou.2 ...< Ou.16.

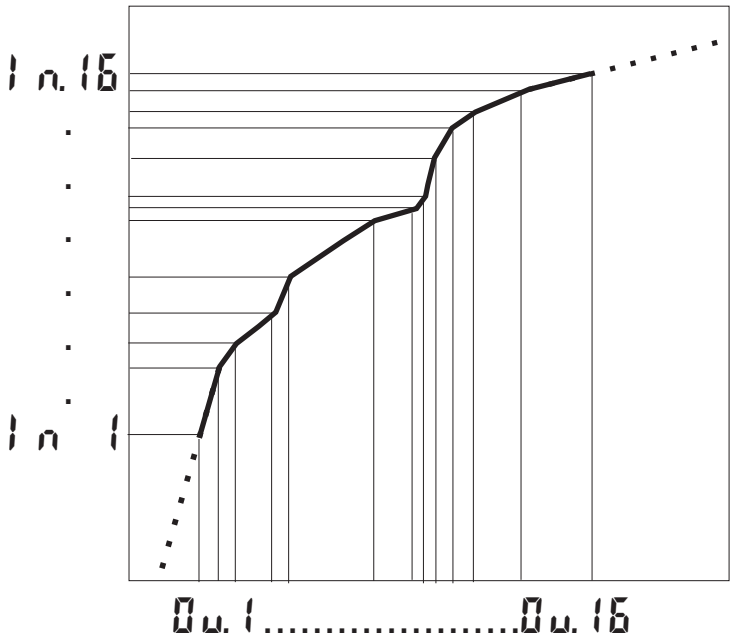

9 BlueControl

BlueControl® is the projecting environment for the PMA BluePort® controller series. The following 3 licences with graded functionality are available:

Functionality	Mini	Basic	Expert
Parameter and configuration setting	yes	yes	yes
Controller and loop simulation	yes	yes	yes
Download: transfer of an engineering to the controller	yes	yes	yes
Online mode / visualization	SIM only	yes	yes
Defining an application specific linearization	yes	yes	yes
Configuration in the extended operating level	yes	yes	yes
Upload: reading an engineering from the controller	SIM only	yes	yes
Basic diagnostic functions	no	no	yes
Saving data file and engineering	no	yes	yes
Printer function	no	yes	yes
Online documentation, help	yes	yes	yes
Implementation of measurement value correction	yes	yes	yes
Data acquisition and trend display	SIM only	yes	yes
Wizard function	yes	yes	yes
Extended simulation	no	no	yes
Programeditor (KS 90-1programmer only)	no	no	yes

The *"Universal BlueControl©"* Software comprises all functions of the Expert-version.
All BluePort devices can be triggered via this software.

The mini version is - free of charge - at your disposal as download at PMA homepage *www.pma-online.de* or on the PMA-CD (please ask for).

At the end of the installation the licence number has to be stated or DEMO mode must be chosen.

At DEMO mode the licence number can be stated subsequently under ***Help → Licence → Change***.

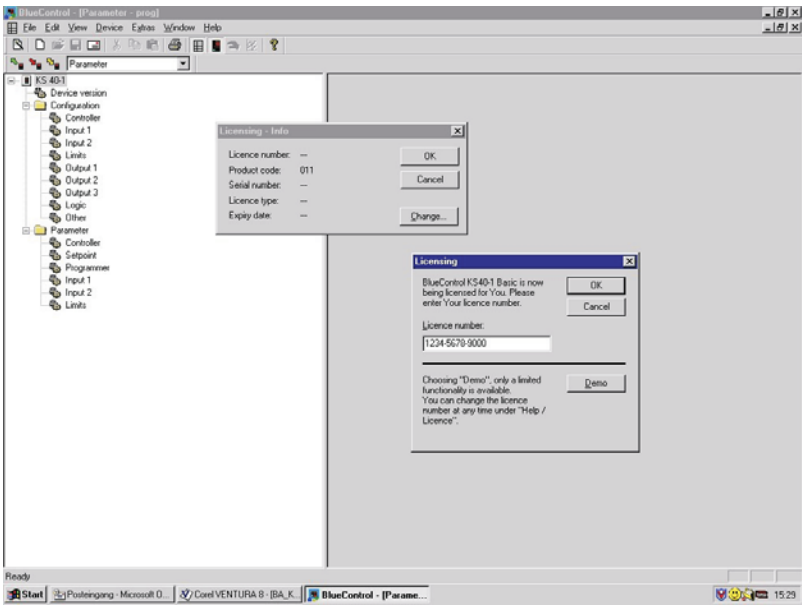

10 Versions

K S 5	- 1		-	0 0		-	
KS 50-1 Format 48 x 96	**0**						
KS 52-1 Format 96 x 96	**2**						
Flat pin connector		**0**					
Screw terminals		**1**					
90..250V AC,INP2, 3 relays			**0**				
24VAC / 18..30VDC, INP2, 3 relays			**1**				
90..250V AC, INP2, 2 relays+ mA/V/logic			**2**				
24VAC / 18..30VDC, INP2, 2 relays+ mA/V/logic			**3**				
90..250VAC, 2 relays (Wechsler) + mA/V/logic			**4**				
No option				**0**			
Modbus RTU + $U_{T + di2/3 + OUT5/6}$				**1**			
$U_{T + di2/3 + OUT5/6}$				**8**			
Standard configuration					**0**		
Configuration to specification					**9**		
No manual						**0**	
Manual german						**D**	
Manual english						**E**	
Manual french						**F**	
Manual russian						**R**	
Standard							**0**
cULus-certified (with screw terminals only)							**U**
DIN EN 14597 certified (replaces DIN 3440)							**D**
Standard version							**00**
Customer specification							**..**

Accessories delivered with the instrument

Operating manual (if selected using the ordering code)

- 2 fixing clamps
- operating note in 15 languages

Accessory equipment with ordering information

Description			Order no.
Heating current transformer 50A AC			9404-407-50001
PC-adaptor for the front-panel interface (RS232)			9407-998-00001
Standard rail adapter			9407-998-00061
Operating manual	German		9499-040-62818
Operating manual	English		9499-040-62811
Operating manual	French		9499-040-62832
Operating manual	Russian		9499-040-62865
Interface description Modbus RTU	German		9499-040-63618
Interface description Modbus RTU	English		9499-040-63611
BlueControl (engineering tool)	Mini	Download	www.pma-online.de
BlueControl (engineering tool)	Basic		9407-999-11001
BlueControl (engineering tool)	Expert		9407-999-11011
BlueControl (engineering tool)	Universal		9407-999-19011

11 Technical data

INPUTS

PROCESS VALUE INPUT INP1

Resolution:	> 14 bits
Decimal point:	0 to 3 digits behind the decimal point
Dig. input filter:	adjustable 0,000...9999 s
Scanning cycle:	100 ms
Measured value correction:	2-point or offset correction

Thermocouples

→ Table 1 (page 65)

Input resistance:	≥1 MΩ
Effect of source resistance:	1 μV/Ω

Cold-junction compensation

Maximal additional error:	± 0,5 K

Sensor break monitoring

Sensor current:	≤ 1 μA
Configurable output action	

Resistance thermometer

→ Table 2 (page 65)

Connection:	2 or 3-wire
Lead resistance:	max. 30 Ohm
Input circuit monitor:	break and short circuit

Special measuring range

BlueControl (engineering tool) can be used to match the input to sensor KTY 11-6 (characteristic is stored in the controller).

Physical measuring range:	0...4500 Ohm
Linearization segments	16

Current and voltage signals

→ Table 3 (page 65)

Span start, end of span:	anywhere within measuring range
Scaling:	selectable -1999...9999
Linearization:	16 segments, adaptable with BlueControl
Decimal point:	adjustable
Input circuit monitor:	12,5% below span start (2mA, 1V)

SUPPLEMENTARY INPUT INP2

Resolution:	> 14 bits
Scanning cycle:	100 ms
Accuracy:	< 0,5 %

Heating current measurement

via current transformer (→ Accessory equipment)

Measuring range:	0...50mA AC
Scaling:	adjustable -1999...0,000...9999 A

Current measuring range

Technical data as for INP1

CONTROL INPUT DI1

Configurable as switch or push-button (the adjustment is possible only in common for all digital inputs)!
Connection of a potential-free contact suitable for switching "dry" circuits.

Switched voltage:	2,5 V
Switched current:	50 μA

CONTROL INPUTS DI2, DI3 (0PTI0N)

Configurable as switch or push-button!
(the adjustment is possible only in common for all digital inputs)!
Contact-input (KS5_-1_ _ -800_ _-_ _ _)
Connection of a potential-free contact suitable for switching "dry" circuits.

Switched voltage:	5 V
Switched current:	160 μA

Optocoupler input(KS5_-1_ _-100_ _-_ _ _)
Optocoupler input for active triggering

Nominal voltage	24 V DC external
Current sink (IEC 1131 type 1)	
Logic "0"	-3...5 V
Logic "1"	15...30 V
Current requirement	approx.. 5 mA

TRANSMITTER SUPPLY U_T (0PTI0N)

Power:	22 mA / ≥ 18 V

If the universal output OUT3 is used there may be no external galvanic connection between measuring and output circuits!

GALVANIC ISOLATION

——— Safety isolation
═══ Function isolation

Mains supply	Process value input INP1 Supplementary input INP2 Digital input di1
Relay outputs OUT 1,2	RS422/485 interface
Relay output OUT3	Digital inputs di2, 3
	Universal output OUT3
	Transmitter supply U_T
	OUT5, OUT6

OUTPUTS

RELAY OUTPUTS OUT1, OUT2

Contact type:	KS5_-1_0-_00_ _-_ _ _ KS5_-1_1-_00_ _-_ _ _ KS5_-1_2-_00_ _-_ _ _ KS5_-1_3-_00_ _-_ _ _ 2 NO contacts with common connection KS5_-1_4-_00_ _-_ _ _ KS5_-1_5-_00_ _-_ _ _ 2 potentialfree change-over contacts
Max. contact rating:	500 VA, 250 V, 2A at 48...62 Hz, resistive load
Min. contact rating:	6V, 1 mA DC
Operating life (electr.):	800.000 duty cycles with max. rating

OUT3 USED AS RELAY OUTPUT

Contact type:	potential-free changeover contact
Max.contact rating:	500 VA, 250 V, 2A at 48...62 Hz, resistive load
Min. contact rating:	5V, 10 mA AC/DC
Operating life (electr.):	600.000 duty cycles with max. contact rating

Note:
If the relays OUT1...OUT3 operate external contactors, these must be fitted with RC snubber circuits to manufacturer specifications to prevent excessive switch-off voltage peaks.

OUT3 AS UNIVERSAL OUTPUT

Galvanically isolated from the inputs.

Freely scalable resolution: 11bits

Current output

0/4...20 mA configurable.

Signal range:	0...approx.22mA
Max. load:	≤ 500 Ω
Load effect:	no effect
Resolution:	≤ 22 µA (0,1%)
Accuracy	≤ 40 µA (0,2%)

Voltage output

0/2...10V configurable

Signal range:	0...11 V
Min. load:	≥ 2 kΩ
Load effect:	no effect
Resolution:	≤ 11 mV (0,1%)
Accuracy	≤ 20 mV (0,2%)

OUT3 used as transmitter supply

Output power: 22 mA / ≥13 V

OUT3 used as logic output

Load ≤ 500 Ω	0/≤20 mA
Load > 500 Ω	0/> 13 V

OUTPUTS OUT5, OUT6 (OPTION)

Galvanically isolated opto-coupler outputs.
Grounded load: common positive voltage.
Output rating: 18...32 VDC; ≤ 70 mA
Internal voltage drop: ≤ 1V with I_{max}. Protective circuit: built-in against short circuit, overload, reversed polarity (free-wheel diode for relay loads).

POWER SUPPLY

Dependent of order:

AC SUPPLY

Voltage:	90...250 V AC
Frequency:	48...62 Hz
Power consumption	approx. 7.3 VA

UNIVERSAL SUPPLY 24 V UC

AC voltage:	20,4...26,4 V AC
Frequency:	48...62 Hz
DC voltage:	18...31 V DC class 2
Power consumption:	approx.. 7.3 VA

BEHAVIOUR WITH POWER FAILURE

Configuration, parameters and adjusted set-points, control mode: Non-volatile storage in EEPROM

BLUEPORT FRONT INTERFACE

Connection of PC via PC adapter (see "Accessory equipment"). The BlueControl software is used to configure, set parameters and operate the controller.

BUS INTERFACE (OPTION)

Galvanically isolated

Physical:	RS 422/485
Protocol:	Modbus RTU
Transmission speed:	2400, 4800, 9600, 19.200 bits/sec
Address range:	1...247

Number of controllers per bus: 32
Repeaters must be used to connect a higher number of controllers.

ENVIRONMENTAL CONDITIONS

Protection modes

Front panel:	IP 65 (NEMA 4X)
Housing:	IP 20
Terminals:	IP 00

Permissible temperatures

For specified accuracy:	0...60°C
Warm-up time:	≥ 15 minutes
For operation:	-20...65°C
For storage:	-40...70°C

Humidity

max. 95% rel. humidity

75% yearly average, no condensation

Altitude
To 2000 m above sea level

Shock and vibration
Vibration test Fc (DIN 68-2-6)

Frequency:	10...150 Hz
Unit in operation:	1g or 0,075 mm
Unit not in operation:	2g or 0,15 mm

Shock test Ea (DIN IEC 68-2-27)

Shock:	15g
Duration:	11ms

Electromagnetic compatibility
Complies with EN 61 326-1
(for continuous, non-attended operation)

GENERAL

Housing

Material:	Makrolon 9415 flame-retardant
Flammability class:	UL 94 V0, self-extinguishing

Plug-in module, inserted from the front

Safety test
Complies with EN 61010-1 (VDE 0411-1):
Overvoltage category II, Contamination class 2
Working voltage range 300 V, Protection class II

Certifications
Type tested to EN 14597 (replaces DIN 3440)
With certified sensors applicable for:
- Heat generating plants with outflow temperatures up to 120°C to DIN 4751
- Hot-water plants with outflow temperatures above 110°C to DIN 4752
- Thermal transfer plants with organic transfer media to DIN 4754
- Oil-heated plants to DIN 4755

cULus-certification
(Type 1, indoor use)
File: E 208286

Mounting
Panel mounting with two fixing clamps at top/bottom or right/left,
High-density mounting possible

Mounting position:	uncritical
Weight:	0,27kg

Accessories delivered with the unit
Operating manual (if selected in the order code)
Fixing clamps
operating hint (12 languages)

Table 1 Thermocouple measuring ranges

Thermocouple type		Range		Accuracy	Resolution (∅)
L	Fe-CuNi (DIN)	-100...900°C	-148...1652°F	≤ 2K	0,1 K
J	Fe-CuNi	-100...1200°C	-148...2192°F	≤ 2K	0,1 K
K	NiCr-Ni	-100...1350°C	-148...2462°F	≤ 2K	0,2 K
N	Nicrosil/Nisil	-100...1300°C	-148...2372°F	≤ 2K	0,2 K
S	PtRh-Pt 10%	0...1760°C	32...3200°F	≤ 2K	0,2 K

Table 2 Resistance transducer measuring ranges

Type	Sens. current	Range		Accuracy	Resolution (∅)
Pt100	0,2mA	-200...100°C	-140...212°F	≤ 1K	0,1K
Pt100		-200...850°C	-140...1562°F	≤ 1K	0,1K
Pt1000		-200...850°C	-140...392°F	≤ 2K	0,1K
KTY 11-6		-50...150°C	-58...302°F	≤ 2K	0,05K

Table 3 Current and voltage measuring ranges

Range	Input resistance	Accuracy	Resolution (∅)
0-10 Volt	≈ 110 kΩ	≤ 0,1 %	≤ 0,6 mV
0-20 mA	49 Ω (voltage requirement ≤ 2,5 V)	≤ 0,1 %	≤ 1,5 µA

12 Safety hints

This unit was built and tested in compliance with VDE 0411-1 / EN 61010-1 and was delivered in safe condition.
The unit complies with European guideline 2004/108/EG (EMC) and is provided with CE marking.
The unit was tested before delivery and has passed the tests required by the test schedule. To maintain this condition and to ensure safe operation, the user must follow the hints and warnings given in this operating manual.
The unit is intended exclusively for use as a measurement and control instrument in technical installations.

⚠ **Warning**
If the unit is damaged to an extent that safe operation seems impossible, the unit must not be taken into operation.

ELECTRICAL CONNECTIONS
The electrical wiring must conform to local standards (e.g. VDE 0100). The input measurement and control leads must be kept separate from signal and power supply leads.
In the installation of the controller a switch or a circuit-breaker must be used and signified. The switch or circuit-breaker must be installed near by the controller and the user must have easy access to the controller.

COMMISSIONING
Before instrument switch-on, check that the following information is taken into account:

- Ensure that the supply voltage corresponds to the specifications on the type label.
- All covers required for contact protection must be fitted.
- If the controller is connected with other units in the same signal loop, check that the equipment in the output circuit is not affected before switch-on. If necessary, suitable protective measures must be taken.
- The unit may be operated only in installed condition.
- Before and during operation, the temperature restrictions specified for controller operation must be met.

SHUT-DOWN
For taking the unit out of operation, disconnect it from all voltage sources and protect it against accidental operation.
If the controller is connected with other equipment in the same signal loop, check that other equipment in the output circuit is not affected before switch-off. If necessary, suitable protective measures must be taken.

MAINTENANCE, REPAIR AND MODIFICATION

The units do not need particular maintenance.



Warning

When opening the units, or when removing covers or components, live parts and terminals may be exposed.

Before starting this work, the unit must be disconnected completely.

After completing this work, re-shut the unit and re-fit all covers and components. Check if specifications on the type label must be changed and correct them, if necessary.



Caution

When opening the units, components which are sensitive to electrostatic discharge (ESD) can be exposed. The following work may be done only at workstations with suitable ESD protection.

Modification, maintenance and repair work may be done only by trained and authorized personnel. For this purpose, the PMA service should be contacted.



The cleaning of the front of the controller should be done with a dry or a wetted (spirit, water) kerchief.

12.1 *Reset to default*



In the event of faulty configuration, the instrument can be reset to default.

In the event of faulty configuration, the instrument can be reset to default.

❶ To start resetting, the operator must hold down the increment and the decrement key ▲▼ **simultaneously** when switching on the supply voltage.
❷ Subsequently, press the increment key ▲ to select YES.
❸ Press ↵ to confirm reset to default and to start copying (display COPY).
❹ Subsequently, the instrument restarts.

In all other cases, no reset is necessary (cancellation via Timeout).

If one of the operating levels is disabled (using BlueControl®) and the Loc safety switch is open, reset to default is not possible.

If a pass code was defined (using BlueControl®) and if the Loc safety switch is open without an operating level being blocked, entry of the correct pass code is prompted with text PASS after confirmation under ❸. If the pass code is faulty, resetting is not executed.

Copying COPY may take several seconds.

An individual default data set can be generated using the BlueControl® Software.

Index

0-9

2-point correction 55

A

Accessories 62
Alarm handling . . . . . 25 - 26

B

BlueControl 61
Boost function 58
Bus interface
  Technical Data 65

C

Calibration level (CAL) . . . . . 53 - 55
Certifications 66
Configuration examples
  2-point controller . . . . . 42 - 43
  3-point stepping controller . . . 44
  D - Y -Off controller 45
  Measured value output 46
  Signaller 41
Configuration level
  Configuration parameters . . 29 - 37
  Parameter survey 28
Connecting diagram 7
Connecting examples
  di2/3, 2-wire transmitter supply . 10
  INP2 current transformer 9
  OUT1/2 heating/cooling 9
  OUT3 as logic output 10
  OUT3 transmitter supply 10
  RS485 interface 11
Control inputs di1, di2, di3
  Technical data 64
Cooling functions
  Constant period 40
  Standard 38
  Water cooling linear 39
  Water cooling non-linear 39
Current signal measuring range 64

D

Digital inputs di1, di2, di3
  Configuration 34
  Technical data 64

E

Environmental conditions 65
Equipment 63
Error list 14
Error status 15

F

F - key 12
Front view 12

I

Input INP1
  Configuration 30
  Parameters 51
  Technical data 64
Input INP2
  Configuration 31
  Parameters 51
  Technical data 64
Input scaling 52

L

LED
  Ada - LED 12
  Err - LED 12
  ⎍ - LED 12
  LED colours 12
  ☜ - LED 12
  run - LED 12
  SP.x - LED 12
Linearization 60

M

Maintenance manager . . . . . 14 - 15
Manual tuning 23
Modbus master 59
Mounting . . . . . 5 - 6

O
Offset correction 54
Optimization at the setpoint 19
Output OUT1
Configuration 32
Technical data 65
Output OUT2
Configuration 32
Technical data 65
Output OUT3
Configuration 32
Technical data 65
Output OUT5
Configuration 33
Technical data 65
Output OUT6
Configuration 33
Technical data 65

P
Parameter setting level
Parameter survey 48
Parameters . . . . . 49 - 51
Power supply 65
Programmer
Changing segment end setpoint . 56
Changing segment time 56
Parameter setting 56
Set-up 56
Starting/Stopping 56

R
Reset to default 69
Resistance thermometer measuring range 64

S
Safety hints . . . . . 67 - 69
Safety switch. 5
Safety test. 66
Self tuning
Cancellation 17
Causes of cancellation 17
Self-tuning cancellation 17
Set-point processing 38
Start-up circuit 57

T
Thermocouple measuring range 64

V
Versions . . . . . 62 - 63
Voltage signal measuring range 64



9499-040-62811

Subject to alterations without notice
Änderungen vorbehalten
Sous réserve de toutes modifications

© PMA Prozeß- und Maschinen-Automation GmbH
P.O.B. 310 229, D-34058 Kassel, Germany
Printed in Germany 9499-040-62811 (08/2013)

A6

A5 auf A6 gefaltet, 2-fach geheftet, SW-Druck Normalpapier weiß 80g/m^2