E70233

Connector

Cage clamps / 100 pcs.

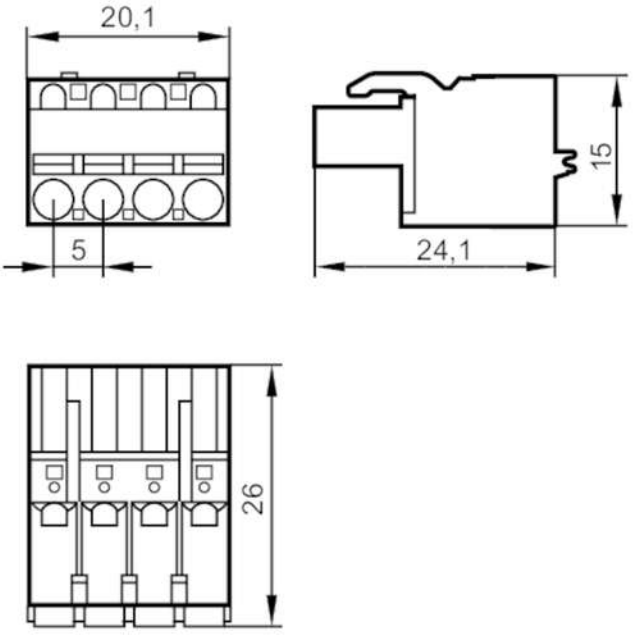

Electrical data		
Max. load current	[A]	10; (2,5 mm²)
Operating conditions		
Ambient temperature	[°C]	-40...115
Mechanical data		
Weight	[g]	690
Materials		current carrying parts: copper alloy tin-plated; PA
Tightening torque	[Nm]	0.5
Remarks		
Pack quantity		100 pcs.
Electrical connection		

0.2...2.5 mm²; Abisolierlänge: 9…10 mm