DATASHEET

BU-164-@

(Banana Socket, Unshrouded, Angled, Panel Mount)





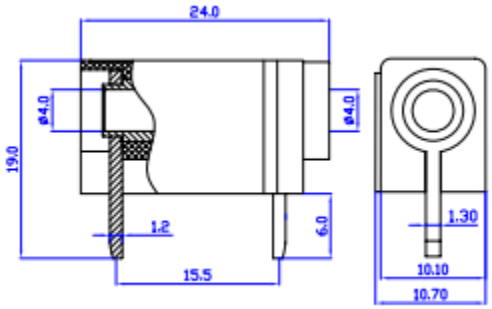

- The BU-164-@ is a 4mm banana socket that is made for panel or PCB mounting. The connector allows the mating of unshrouded banana plugs.
- Material:
  - Body: Brass with silver plating
  - Cover: PA (Nylon)
- Rating:
  - Voltage: 30VAC – 60VDC
  - Current: 24A
  - Insulating Resistance: ≥500MΩ
  - Contact Resistance: ≤ 0.005Ω
- Color: The "@" in the model number indicates color.
  Available colors are: -0 Black, -2 Red
- RoHS 3 Compliant.

Mueller Electric Company
2850 Gilchrist Rd. Bld 5A
Akron, OH 44305

www.muellerelectric.com

Toll Free: 800.955.2629
Phone: 330.780.2525
Fax: 330.780.2524