THE INFORMATION CONTAINED IN THIS DRAWING IS THE SOLE PROPERTY OF L-COM, INC. ANY REPRODUCTION IN PART OR WHOLE WITHOUT THE WRITTEN PERMISSION OF L-COM, INC. IS PROHIBITED.

REVISIONS			
REV	DESCRIPTION	DATE	APPROVED
A	INTERNAL RELEASE	1/9/12	D.GRIFFIN
B	ECN6550: ADDED CHANNEL RATING NOTE	3/20/13	D. DESJARDIN
C	ECN 7667: REMOVE CHANNEL RATING NOTE AND ALL LENGTHS OVER 30 FT	11/10/14	D.FRISIELLO

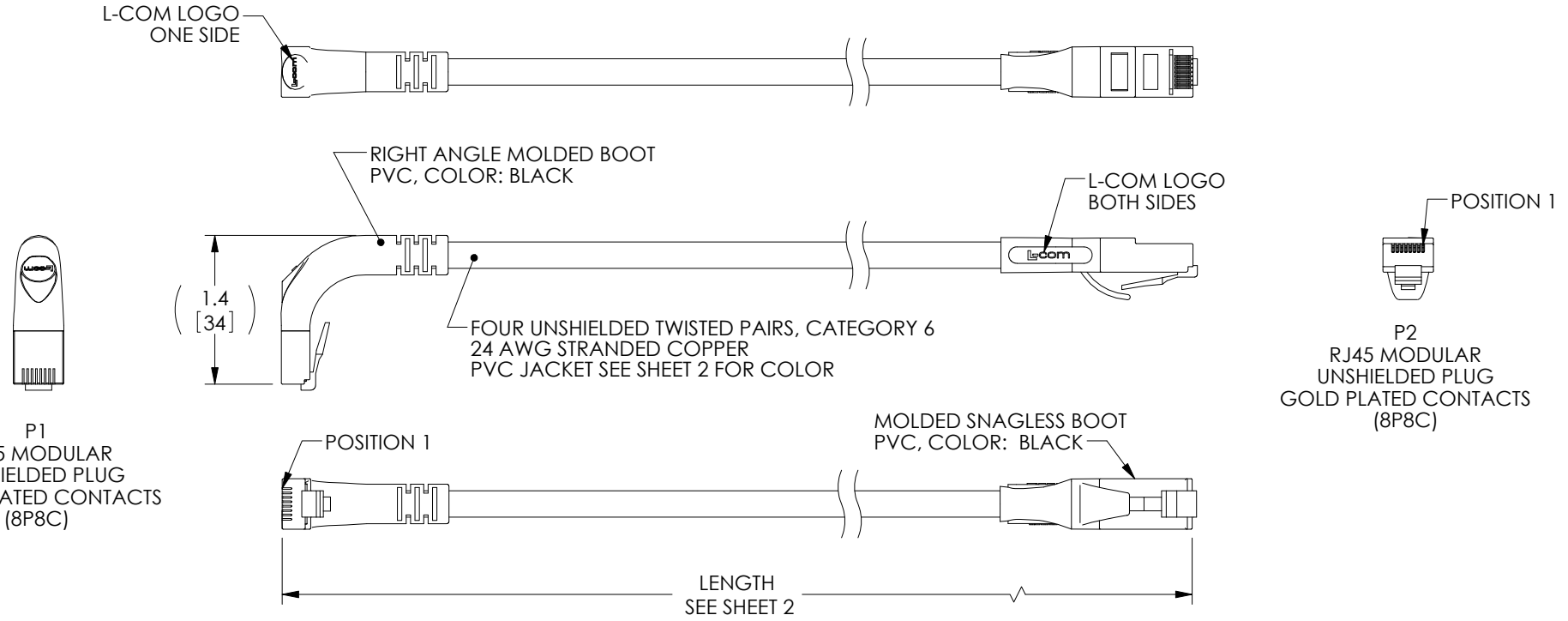

WIRING MAP

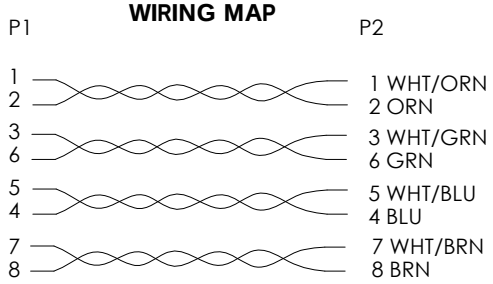

C

NOTES:

1. PLUG CONFORMS TO TIA-1096
2. CABLE ASSEMBLY SHALL BE TESTED FOR CONTINUITY.
3. CABLE ASSEMBLY SHALL BE INDIVIDUALLY PACKAGED IN ACCORDANCE WITH L-COM PACKAGING SPECIFICATION PS-0031.

REGULATORY COMPLIANCE:
CE2011/65/EU(RoHS DIRECTIVE)

UNLESS OTHERWISE SPECIFIED,
DIMENSIONS ARE IN INCHES [mm]
OVERALL CABLE LENGTH TOLERANCE:
≤12 [305] = +1 [25] / -0
>12 [305] ≤60 [1524] = +2 [51] / -0
>60 [1524] ≤120 [3048] = +4 [102] / -0
>120 [3048] ≤300 [7620] = +6 [152] / -0
>300 [7620] = +5% / -0%
ALL OTHER DIMENSIONAL TOLERANCES:
.X = ± .2 [5.08]
.XX = ± .02 [.51]
.XXX = ±.005 [.13]
PROJECTION

APPROVALS		DATE
DRAWN BY	D. PARHAM	01/05/2012
CHECKED BY	D. GUTTADAURO	01/06/2012
APPROVED BY	M. MARTINEZ	01/06/2012

CONFIGURATION DETAILS OF UNDIMENSIONED FEATURES MAY VARY

COLOR VARIATIONS MAY OCCUR

L-COM Global Connectivity
45 BEECHWOOD DRIVE
NORTH ANDOVER, MA
01845

CATEGORY
TELECOM/MODULAR

PRODUCT DESCRIPTION
C6 PVC UTP STR-DWN

SIZE	FSCM NO.	DWG. NO.	REV.
A	43321	TRD695RA1	C

SCALE: NONE | CAD FILE: TRD695RA1.SLDDRW | SHEET 1 OF 2

THE INFORMATION CONTAINED IN THIS DRAWING IS THE SOLE PROPERTY OF L-COM, INC. ANY REPRODUCTION IN PART OR WHOLE WITHOUT THE WRITTEN PERMISSION OF L-COM, INC. IS PROHIBITED.

C

PART NUMBER	COLOR	LENGTH FEET [METERS]
TRD695RA1BLK-1	BLACK	1.0 [0.30]
TRD695RA1BLK-2	BLACK	2.0 [0.61]
TRD695RA1BLK-3	BLACK	3.0 [0.91]
TRD695RA1BLK-5	BLACK	5.0 [1.52]
TRD695RA1BLK-7	BLACK	7.0 [2.13]
TRD695RA1BLK-10	BLACK	10.0 [3.05]
TRD695RA1BLK-15	BLACK	15.0 [4.57]
TRD695RA1BLK-20	BLACK	20.0 [6.10]
TRD695RA1BLK-25	BLACK	25.0 [7.62]
TRD695RA1BLK-30	BLACK	30.0 [9.14]
TRD695RA1BL-1	BLUE	1.0 [0.30]
TRD695RA1BL-2	BLUE	2.0 [0.61]
TRD695RA1BL-3	BLUE	3.0 [0.91]
TRD695RA1BL-5	BLUE	5.0 [1.52]
TRD695RA1BL-7	BLUE	7.0 [2.13]
TRD695RA1BL-10	BLUE	10.0 [3.05]
TRD695RA1BL-15	BLUE	15.0 [4.57]
TRD695RA1BL-20	BLUE	20.0 [6.10]
TRD695RA1BL-25	BLUE	25.0 [7.62]
TRD695RA1BL-30	BLUE	30.0 [9.14]

PART NUMBER	COLOR	LENGTH FEET [METERS]
TRD695RA1RD-1	RED	1.0 [0.30]
TRD695RA1RD-2	RED	2.0 [0.61]
TRD695RA1RD-3	RED	3.0 [0.91]
TRD695RA1RD-5	RED	5.0 [1.52]
TRD695RA1RD-7	RED	7.0 [2.13]
TRD695RA1RD-10	RED	10.0 [3.05]
TRD695RA1RD-15	RED	15.0 [4.57]
TRD695RA1RD-20	RED	20.0 [6.10]
TRD695RA1RD-25	RED	25.0 [7.62]
TRD695RA1RD-30	RED	30.0 [9.14]
TRD695RA1GR-1	GREEN	1.0 [0.30]
TRD695RA1GR-2	GREEN	2.0 [0.61]
TRD695RA1GR-3	GREEN	3.0 [0.91]
TRD695RA1GR-5	GREEN	5.0 [1.52]
TRD695RA1GR-7	GREEN	7.0 [2.13]
TRD695RA1GR-10	GREEN	10.0 [3.05]
TRD695RA1GR-15	GREEN	15.0 [4.57]
TRD695RA1GR-20	GREEN	20.0 [6.10]
TRD695RA1GR-25	GREEN	25.0 [7.62]
TRD695RA1GR-30	GREEN	30.0 [9.14]

PART NUMBER	COLOR	LENGTH FEET [METERS]
TRD695RA1GRY-1	GRAY	1.0 [0.30]
TRD695RA1GRY-2	GRAY	2.0 [0.61]
TRD695RA1GRY-3	GRAY	3.0 [0.91]
TRD695RA1GRY-5	GRAY	5.0 [1.52]
TRD695RA1GRY-7	GRAY	7.0 [2.13]
TRD695RA1GRY-10	GRAY	10.0 [3.05]
TRD695RA1GRY-15	GRAY	15.0 [4.57]
TRD695RA1GRY-20	GRAY	20.0 [6.10]
TRD695RA1GRY-25	GRAY	25.0 [7.62]
TRD695RA1GRY-30	GRAY	30.0 [9.14]
TRD695RA1OR-1	ORANGE	1.0 [0.30]
TRD695RA1OR-2	ORANGE	2.0 [0.61]
TRD695RA1OR-3	ORANGE	3.0 [0.91]
TRD695RA1OR-5	ORANGE	5.0 [1.52]
TRD695RA1OR-7	ORANGE	7.0 [2.13]
TRD695RA1OR-10	ORANGE	10.0 [3.05]
TRD695RA1OR-15	ORANGE	15.0 [4.57]
TRD695RA1OR-20	ORANGE	20.0 [6.10]
TRD695RA1OR-25	ORANGE	25.0 [7.62]
TRD695RA1OR-30	ORANGE	30.0 [9.14]

PART NUMBER	COLOR	LENGTH FEET [METERS]
TRD695RA1Y-1	YELLOW	1.0 [0.30]
TRD695RA1Y-2	YELLOW	2.0 [0.61]
TRD695RA1Y-3	YELLOW	3.0 [0.91]
TRD695RA1Y-5	YELLOW	5.0 [1.52]
TRD695RA1Y-7	YELLOW	7.0 [2.13]
TRD695RA1Y-10	YELLOW	10.0 [3.05]
TRD695RA1Y-15	YELLOW	15.0 [4.57]
TRD695RA1Y-20	YELLOW	20.0 [6.10]
TRD695RA1Y-25	YELLOW	25.0 [7.62]
TRD695RA1Y-30	YELLOW	30.0 [9.14]

L-COM Global Connectivity
45 BEECHWOOD DRIVE
NORTH ANDOVER, MA
01845

CATEGORY
TELECOM/MODULAR

PRODUCT DESCRIPTION
C6 PVC UTP STR-DWN

SIZE	FSCM NO.	DWG. NO.	REV.
A	43321	TRD695RA1	C

SCALE: NONE | CAD FILE: TRD695RA1.SLDDRW | SHEET 2 OF 2