Photoelectric sensor
diffuse mode sensor with background suppression
S18SP6FF100Q

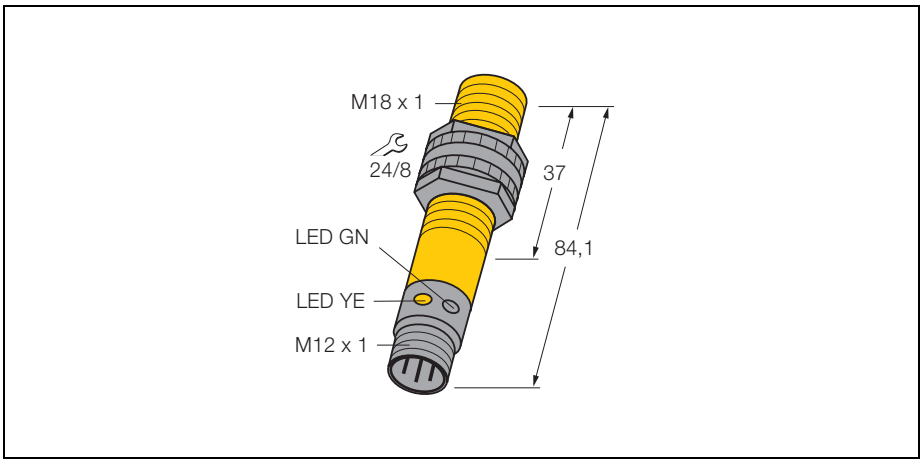

Type	S18SP6FF100Q
Ident-No.	3848700
Operating mode	Diffuse mode sensors with fixed-field background suppression
Type of light	IR
Wave length	880 nm
Sensing range [mm]	0... 100 mm
Operating temperature	-40 ...+ 70 °C
Rated operational voltage (DC) U_B	10... 30 VDC
Rated operational current (DC) I_e	≤ 150 mA
No-load current I_0	≤ 35 mA
Short-circuit protection	yes, cyclic
Reverse polarity protection	yes
Output function	connection programmable, PNP
Switching frequency	≤ 160 Hz
Max. switch-on delay	≤ 100 ms
Overload trip point	>220 mA
Housing style	cylindrical/thread; S18
Dimensions	84,1 mm
Housing material	plastic, PBT
Lens	Kunststoff, Acryl
Wiring	connector, M12 x 1
Degree of protection	IP68 - IP69K
Supply voltage indication	LED green
Switching status indication	LED yellow
Error indication	LED green flashing
Alarm indication	LED yellow flashing

- **selectable light or dark operation or light operation with alarm function**
- **M12 x 1 connector**
- **connector M12 x 1**

Wiring diagram

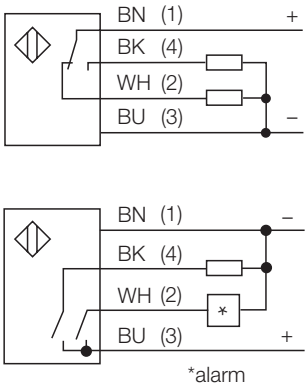

The emitter and receiver are incorporated in a single housing. The light reflection of the target is detected and triggers the sensor to switch. Thus the switching distance depends largely on the reflectivity of the target.

Excess gain curve

Excess gain in relation to the distance

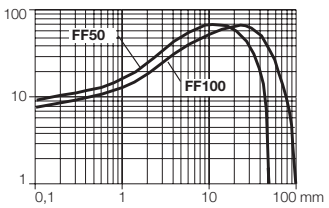

Subject to change without notice • © Hans Turck GmbH & Co.KG 2002 • Edition: • 12.04.2004

Hans Turck GmbH & Co.KG • Postfach • D-45466 Mülheim an der Ruhr • Telefon 02 08/49 52-0 • Telefax 02 08/49 52-264