RF 15, silver, full illumination, 2.9 ± 0.6 N, lamp green, bezel white, 1 NO



fields of application

- Measurement-control-regulation
- Mechanical and system engineering
- Automotive
- Electro-medical

special features

- Silver contacts, reliable switching with medium currents
- Optional: spot illumination or full illumination
- Key grid 19.05 mm
- Overall height: 9.7 mm or 12.5 mm with keycap
- Terminal technology: THT

CE

description

The RF 15 silver tactile switches have a 15 x 15 mm edge length, reliable silver contacts and a noticeable click. They are used in flat data entry keyboards under overlays or under keycaps, such as RAFI RK 90 keycaps.

Flat data entry keyboards with RF 15 elements should be constructed in a 19.05 mm grid. With this grid, strips of glue remain between the individual keys on the front panel. The overlay, which we recommend embossing above the key switches, can be glued onto these strips of glue.

RF 15, mit Silber-Kontakten, vollflächige Ausleuchtung der Blende zur Ausleuchtung von Fenstern in der Dekorfolie, bzw. transparenten Tastenkappen RK 90.

technical data

general

Bezel color	white
Luminous element color	green
Operating temperature, min.	-25 °C
Operating temperature, max.	70 °C
Storage temperature, min.	-25 °C
Storage temperature, max.	70 °C
illuminated	Yes
Luminous elements	Full illumination 2 LEDs
Soldering time for manual soldering, max.	5 sec
Soldering temperature for manual soldering	350 °C
Soldering temperature for wave soldering	260 °C
Soldering	Manual / wave

direct links

- RAFI eCatalog

The information in this data sheet only contains general descriptions and / or performance features, which may not apply precisely as described to the respective application, and which my change due to further product enhancements. The technical data, illustrations and other information about our products are the mere results of individual technical testing. These descriptions and other product features are only binding if they expressly agreed upon at the time of the conclusion of a binding contract. In all other cases, we reserve the right to make technical changes as well as changes of availability. Pictures and other graphic illustrations are approximations only. All product names may be trademarks or brand names of the RAFI Group or any other sub-supplier of RAFI. The use of such by any third parties for their own purposes may infringe the rights of the respective entity holding those rights.

RAFI GmbH & Co. KG

Ravensburger Str. 128-134
88276 Berg / Ravensburg
Germany
www.rafi-group.com,
info.headquarters@rafi-group.com

Solder heat resistance according to standard	DIN EN 60068-2-20
Packaging	Tube
Packaging unit	32 pcs.
net weight	2.6 g
Operating life	1,000,000 cycles
B10	1,300,000 cycles
MOQ order	32 pcs.
RoHS compliant	Yes
REACH compliant	Yes

mounting diameters

Outside dimension, length	15 mm
Outside dimension, width	15 mm
Outside dimension, height	9.7 mm
Installation height	9.7 mm
Grid, min.	19.05 mm

mechanical data

Actuation function	momentary contact function
Operating force, min.	2.9 ± 0.6 N
Switching travel	$0.5^{+0.3}$ mm
Contact function	1 NO
Contact system	Snap-action contact
Contact material	Silver
Fixing	Soldering
Solderability	Yes
Terminal on the rear	THT

electrical data

Operating voltage of the luminous element, min.	2 V
Operating voltage of the luminous element, max.	5 V
Rated voltage, min.	3 V
Rated voltage, max.	35 V
Operating current of the luminous element, max.	30 mA
Rated current, min.	0.0001 A
Rated current, max.	0.25 A
Rated power, max.	12.5 W
dropping resistor	no

The information in this data sheet only contains general descriptions and / or performance features, which may not apply precisely as described to the respective application, and which my change due to further product enhancements. The technical data, illustrations and other information about our products are the mere results of individual technical testing. These descriptions and other product features are only binding if they expressly agreed upon at the time of the conclusion of a binding contract. In all other cases, we reserve the right to make technical changes as well as changes of availability. Pictures and other graphic illustrations are approximations only. All product names may be trademarks or brand names of the RAFI Group or any other sub-supplier of RAFI. The use of such by any third parties for their own purposes may infringe the rights of the respective entity holding those rights.

RAFI GmbH & Co. KG

Ravensburger Str. 128-134
88276 Berg / Ravensburg
Germany
www.rafi-group.com,
info.headquarters@rafi-group.com

drawings

Dimensioned drawing

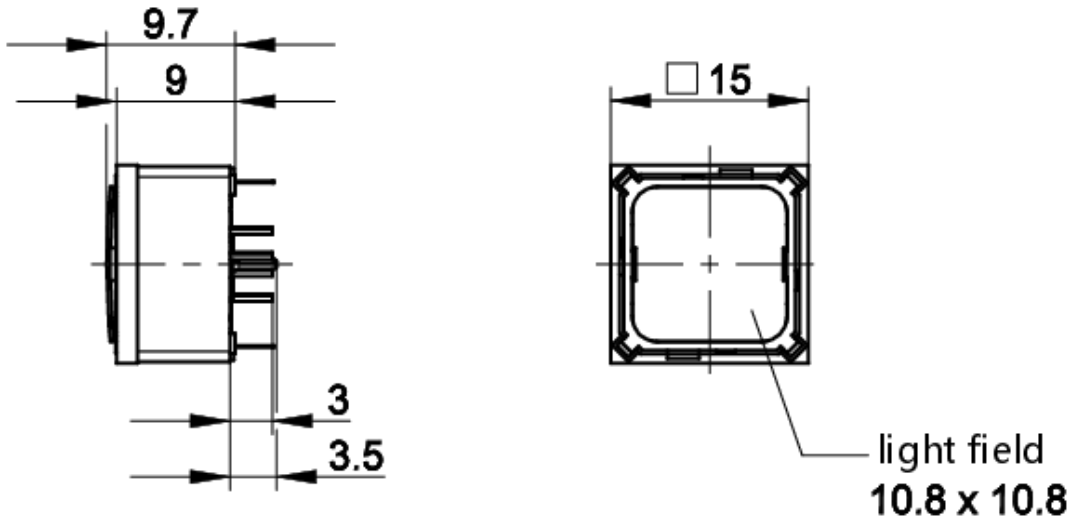

System drawing

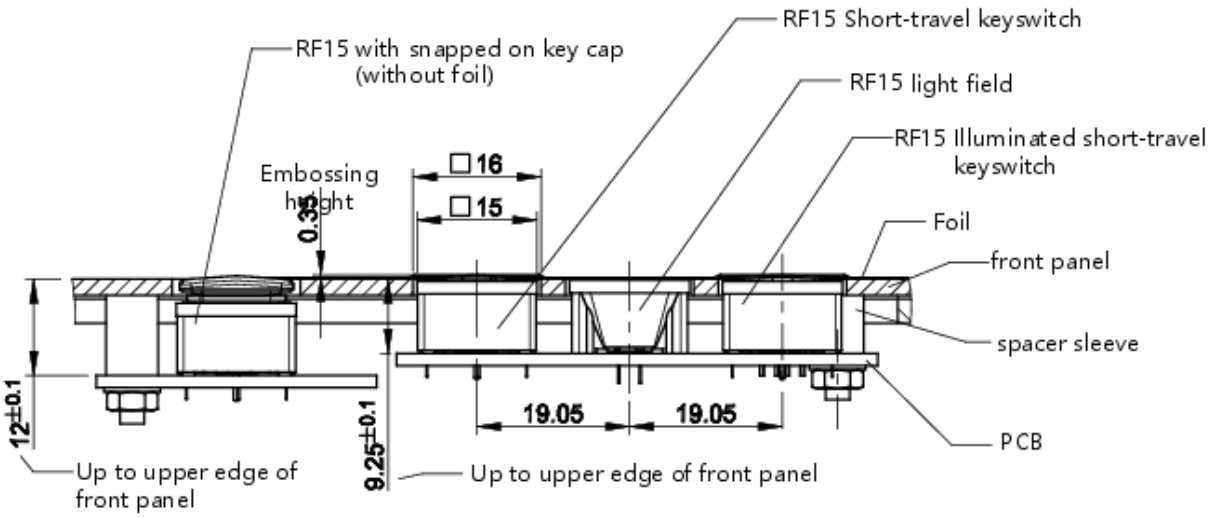

The information in this data sheet only contains general descriptions and / or performance features, which may not apply precisely as described to the respective application, and which my change due to further product enhancements. The technical data, illustrations and other information about our products are the mere results of individual technical testing. These descriptions and other product features are only binding if they expressly agreed upon at the time of the conclusion of a binding contract. In all other cases, we reserve the right to make technical changes as well as changes of availability. Pictures and other graphic illustrations are approximations only. All product names may be trademarks or brand names of the RAFI Group or any other sub-supplier of RAFI. The use of such by any third parties for their own purposes may infringe the rights of the respective entity holding those rights.

RAFI GmbH & Co. KG

Ravensburger Str. 128-134
88276 Berg / Ravensburg
Germany
www.rafi-group.com,
info.headquarters@rafi-group.com

PCB drawing

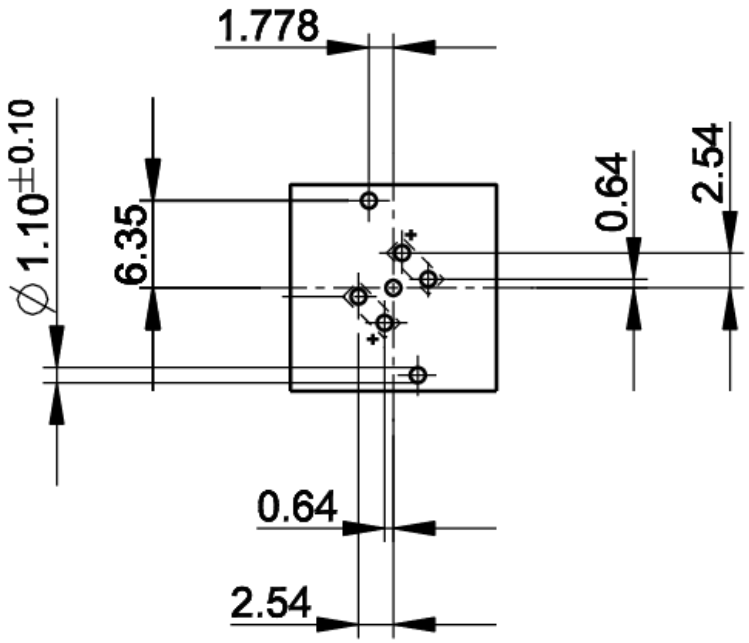

Button full illumination

PCB drawing

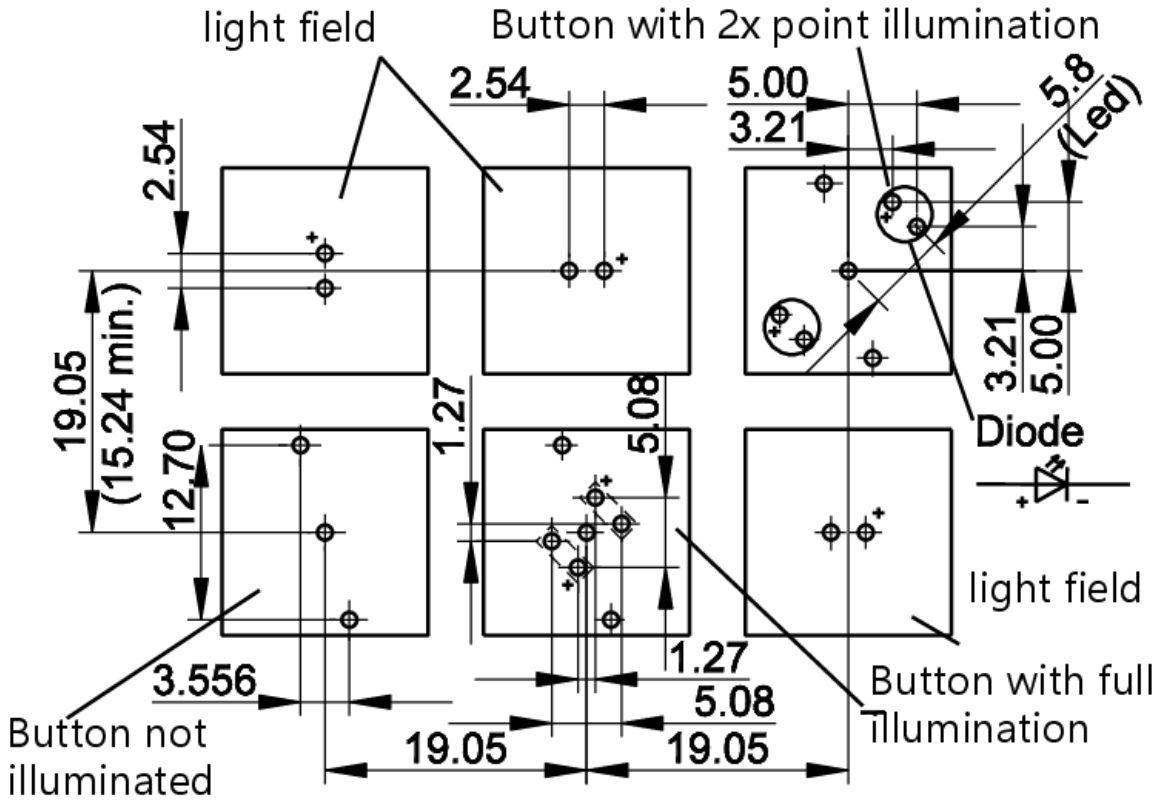

The information in this data sheet only contains general descriptions and / or performance features, which may not apply precisely as described to the respective application, and which my change due to further product enhancements. The technical data, illustrations and other information about our products are the mere results of individual technical testing. These descriptions and other product features are only binding if they expressly agreed upon at the time of the conclusion of a binding contract. In all other cases, we reserve the right to make technical changes as well as changes of availability. Pictures and other graphic illustrations are approximations only. All product names may be trademarks or brand names of the RAFI Group or any other sub-supplier of RAFI. The use of such by any third parties for their own purposes may infringe the rights of the respective entity holding those rights.

RAFI GmbH & Co. KG

Ravensburger Str. 128-134
88276 Berg / Ravensburg
Germany
www.rafi-group.com,
info.headquarters@rafi-group.com

front panel drawing

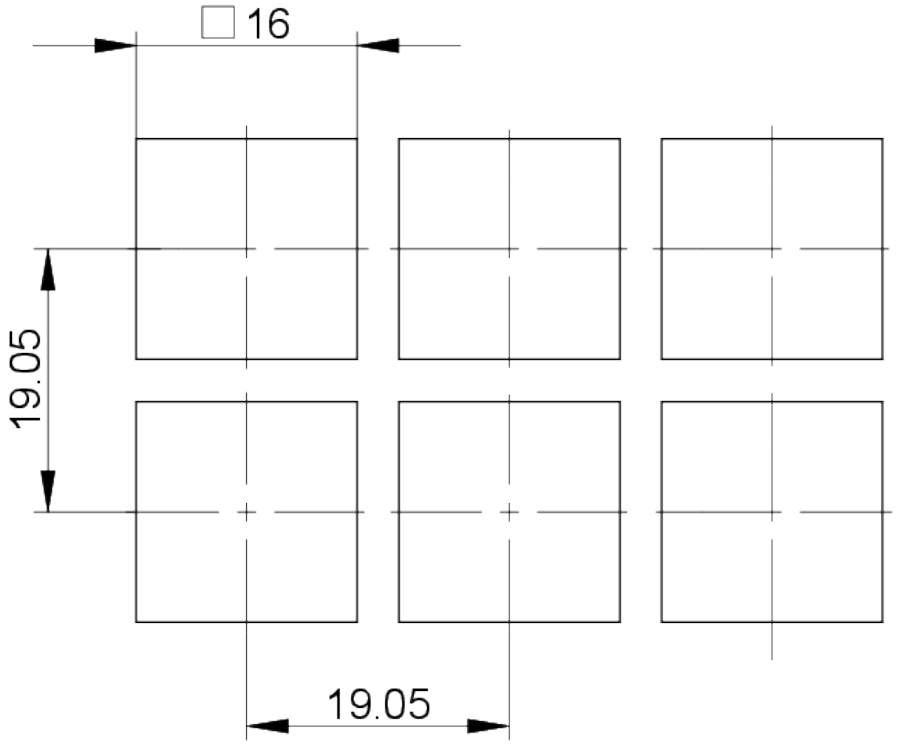

front panel drawing

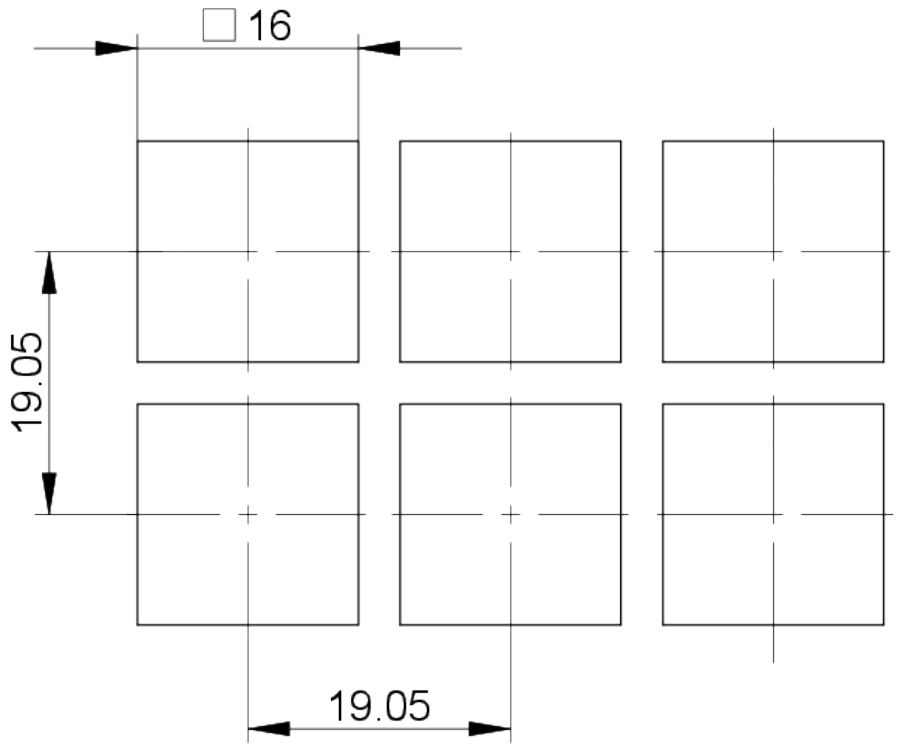

The information in this data sheet only contains general descriptions and / or performance features, which may not apply precisely as described to the respective application, and which my change due to further product enhancements. The technical data, illustrations and other information about our products are the mere results of individual technical testing. These descriptions and other product features are only binding if they expressly agreed upon at the time of the conclusion of a binding contract. In all other cases, we reserve the right to make technical changes as well as changes of availability. Pictures and other graphic illustrations are approximations only. All product names may be trademarks or brand names of the RAFI Group or any other sub-supplier of RAFI. The use of such by any third parties for their own purposes may infringe the rights of the respective entity holding those rights.

RAFI GmbH & Co. KG

Ravensburger Str. 128-134
88276 Berg / Ravensburg
Germany
www.rafi-group.com,
info.headquarters@rafi-group.com