SCHAEFFLER



FAG

6204-C-2Z-C3>V

Deep groove ball bearing

Schaeffler ID:
0949834370030

Deep groove ball bearing 62..-C-2Z, single row, Generation C, shields, steel sheet metal cage

Technical information

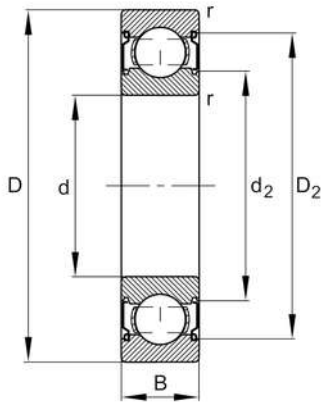

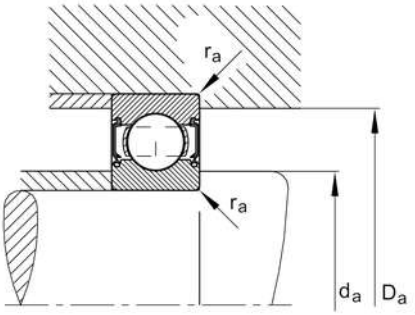

Main Dimensions & Performance Data

d	20 mm	Bore diameter
D	47 mm	Outside diameter
B	14 mm	Width
C_r	14.700 N	Basic dynamic load rating, radial
C_{0r}	6.600 N	Basic static load rating, radial
C_{ur}	455 N	Fatigue load limit, radial
n_G	20.600 1/min	Limiting speed
$n_{\vartheta r}$	18.100 1/min	Reference speed
	0,103 kg	Weight

Mounting dimensions

$d_{a\ min}$	25,6 mm	Minimum diameter shaft shoulder
$D_{a\ max}$	41,4 mm	Maximum diameter of housing shoulder
$r_{a\ max}$	1 mm	Maximum fillet radius

Dimensions

r_{min}	1 mm	Minimum chamfer dimension
D_2	41,4 mm	Caliber diameter outer ring
d_2	26,6 mm	Caliber diameter inner ring

Temperature range

T_{min}	-20 °C	Operating temperature min.
T_{max}	120 °C	Operating temperature max.

Calculation factors

f_0	13,1	Calculation factor

The datasheet is only an overview of dimensions and basic load ratings of the selected product. Please always observe all further information and guidelines for this product. For further information you can use the contact form on our website.