Low Voltage Products

Switches for solar segment
Switch-disconnectors OT



Switch-disconnectors up to 1000 V

Switch-disconnectors

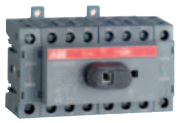

OT16F8
OT25F8
OT40F8

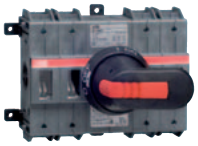

OT160E4

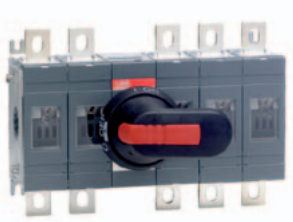

OT200E23P
OT250E23P

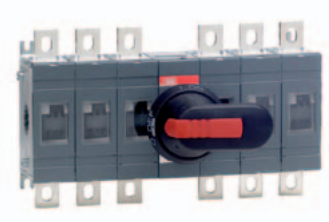

OT200E33P
OT250E33P



OT315E23P
OT400E23P



OT315E33P
OT400E33P



OT630E23P

Enclosed switch-disconnectors



OTP16BA3MS



OTP16BA4MS
OTP16BA8MS
OTP32BA3MS
OTP32BA8MS



Accessories

Optional handles
Extended shafts
Auxiliary contacts

DC

Switch-disconnectors
OT 16...630
OTP 16...32



OT630E33P

Contents:

Introduction....4-5
Technical data....6
Ordering information....7-15
Front operated switch-disconnectors up to 800 VDC....7
Front operated switch-disconnectors up to 1000 VDC....8
Plastic enclosed switch-disconnectors....9
Optional handles....10
Optional handles....11
Optional handles....12
Extended shafts....13
Extended shafts and shaft accessories....14
Auxiliary contacts....15
Dimension drawings....16-18
Index....19

Switches for photovoltaic systems up

ABB's extensive switch offering for solar segment

ABB has always collaborated on the development of products and solutions that can add value to the growth of alternative energy sources. Our experience in renewable energies and respect for the environment has led to extensive investments in developing products suitable for the solar segment.

Currently, our growing portfolio of switches for the solar segment can be divided as follows:

Switch-disconnectors

These are typically used in isolating individual strings of solar panels and battery banks or as the main switch for the whole solar system, both AC and DC. ABB's switches are compact in size, have high DC voltage ratings, unique safety features and global availability and acceptability. ABB switch-disconnectors range from 16 to 630 Amperes and up to 1000 VDC and AC in various switching categories.

Enclosed switches

All switches can be enclosed for outdoor use up to protection class IP65. These products are typically used in residential applications such as combiner boxes for several solar strings.



to 1000 VDC



The switch-disconnectors are compact in size, have high DC voltage ratings and unique safety features.

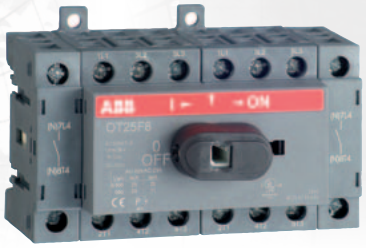





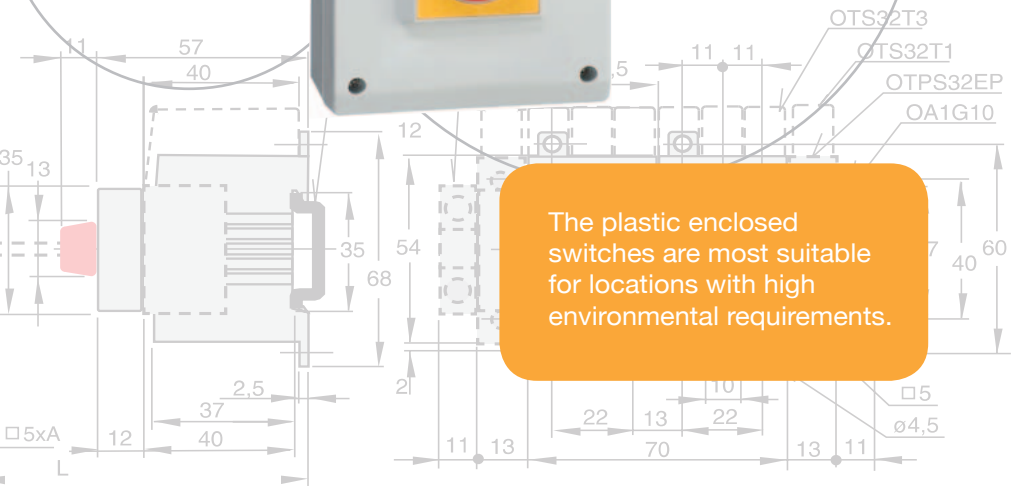

The plastic enclosed switches are most suitable for locations with high environmental requirements.

As the leading manufacturer of switch products, our vision, in cooperation with our customers and partners, is to further develop environmentally safe solutions for the solar industry in order to meet new needs and technical requirements.

Technical data according to IEC 60947 for OT switch-disconnectors

Switch size		A	OT16	OT25	OT40	OT160	OT200	OT250	OT315	OT400	OT630
Rated insulation voltage	Pollution degree 2	V	800	800	800	1 000	1 000	1 000	1 000	1 000	1 000
	Pollution degree 3	V	750	750	750	800	1 000	1 000	1 000	1 000	1 000
Dielectric strength	50 Hz 1min.	kV	6	6	6	10[1)]	10	10	10	10	10
Rated impulse withstand voltage		kV	8	8	8	12[1)]	12	12	12	12	12
Rated thermal current, DC-20 [3)]	In open air, normal conditions [4)]	A	25	32	40	200	200	250	315	400	630
	In enclosure 40°C	A	25	32	40	160	200	250	315	400	630
	In enclosure 60°C	A	20	25	32	125	180	200	280	320	500
...with minimum cable or bar cross section	Cu	mm²	4	6	10	70	95	120	185	240	2x185
Rated operational current / poles in series	550 V	A	16/6 [A)]	25/6 [A)]	32/6 [A)]	160/4 [A)]	200/4 [A)]	250/4	315/4	400/4	600/4
DC-21B	750 V	A	16/8 [A)]	25/8 [A)]	32/8 [A)]	160/4 [A)]	200/5	250/5	315/5	400/5	600/5
	800 V	A	16/8 [1)]	16/8 [1)]	16/8 [1)]		200/5	250/5	315/5	400/5	600/5
	1000 V	A					200/6	250/6	315/6	400/6	600/6
Rated short-time withstand current, 1000 V, 1 s	R.M.S. -value I_{cw}	kA	0.5 [2)]	0.5 [2)]	0.5 [2)]	4 [2)]	8	8	15	15	20
Power loss / pole	At rated current	W	0.3	0.6	1.6	6.5	4	6.5	6.5	10	25
Mechanical endurance	Divide by two for operation cycles	Operations	20 000	20 000	20 000	20 000	20 000	20 000	16 000	16 000	10 000

[A)] Category A
[1)] Pollution Degree 2
[2)] At 690 V.
[3)] Thermal current ratings of OT16…160 apply up to 4-pole versions.
[4)] Normal conditions defined in IEC 60947-1-6.1

Technical data according to IEC 60947 for OTP enclosed switch-disconnectors

Switch size		A	OTP16	OTP32
Rated insulation voltage	Pollution degree 2	V	800	800
	Pollution degree 3	V	750	750
Dielectric strength	50 Hz 1min.	kV	6	6
Rated impulse withstand voltage		kV	8	8
Rated thermal current and rated operational current				
AC-20 & DC-20	In enclosure 40°C	A	25	32
	In enclosure 60°C	A	20	32
Rated operational current / poles in series	220 V	A	16/3	32/3
DC-21A	550 V	A	16/6	32/6
	750 V	A	16/8	32/8
	800 V	A	16/8 [1)]	
Rated short-time withstand current, 690 V, 1 s	R.M.S. -value I_{cw}	kA	0.5	0.5
Power loss / pole	At rated current	W	0.3	0.6
Mechanical endurance	Divide by two for operation cycles	Operations	20 000	20 000

[1)] Category B, Pollution Degree 2



OT16...40



OT160E4

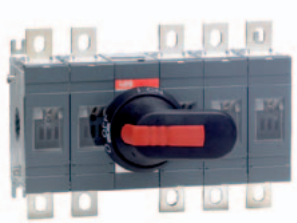

OT200-250E23P

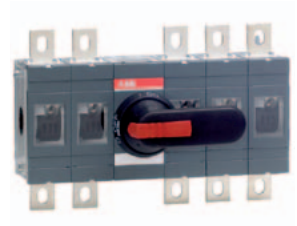

OT315- 400E23P



OT630E23P

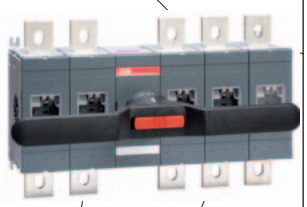

OT630E23P31

Front operated switch-disconnectors up to 750 VDC

Types OT 16...125 include protected terminal clamps, IP 20. Shafts and handles need to be ordered separetely

The type and the ordering numbers are for one piece.

Handle between the poles

Number of poles	Ith (open) [A]	Rated operat. currents DC 21 / 750 V	Type	Order number	Delivery batch [pcs]	Weight/ unit [kg]
8	25	25	OT25F8	1SCA104882R1001	10	0.11
8	40	32	OT40F8	1SCA104938R1001	10	0.14
4	200	160	OT160E4 [1]	1SCA022259R8060	1	1.4

Shafts and handles included as standard

Suitable for switches	Included shaft	Included handle
OT160E4	OXP6X210	OHB65J6

Front operated switch-disconnectors up to 800 VDC

Including terminal bolt kit, a black ON-OFF plastic handle and shaft as standard. The handle is IP65 protected, padlockable in the OFF position and with door interlock in the ON-position. The shaft is adjustable for a depth of installation ranges

Handle between the poles

Number of poles	Ith (open) [A]	Rated operat. currents DC 21 / 800 V	Type	Order number	Delivery batch [pcs]	Weight/ unit [kg]
8	25	16	OT16F8	1SCA104836R1001	1	0.31
5	200	200	OT200E23P	1SCA103713R1001	1	3.2
5	250	250	OT250E23P	1SCA103715R1001	1	3.2
5	315	315	OT315E23P	1SCA101113R1001	1	4.4
5	400	400	OT400E23P	1SCA103717R1001	1	4.4
5	630	600	OT630E23P	1SCA110644R1001	1	7.8
5	630	600	OT630E23P31	1SCA111409R1001	1	7.8

Shafts and handles included as standard

Suitable for switches	Included shaft	Included handle	Included terminal bolts
OT200…250_P	OXP6X210	OHB65J6	M8x25
OT315…400_P	OXP12X185	OHB95J12	M10x30
OT630_P	OXP12X185	OHB125J12	M12x40
OT630_P31	OXP12X185	OHB150J12P	M12x40

1 For special version (rear-operated) please contact ABB

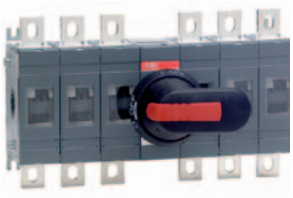

OT200-250E33P

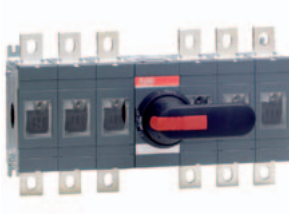

OT315-400E33P



OT630E33P



OT630E33P31

Front operated switch-disconnectors up to 1000 VDC

Including terminal bolt kit, a black ON-OFF plastic handle and shaft as standard. The handle is IP65 protected, padlockable in the OFF position and with door interlock in the ON-position. The shaft is adjustable for a depth of installation ranges

Handle between the poles

Number of poles	Ith (open) [A]	Rated operat. currents DC 21 / 1000 V	Type	Order number	Delivery batch [pcs]	Weight/ unit [kg]
6	200	200	OT200E33P	1SCA103719R1001	1	4.0
6	250	250	OT250E33P	1SCA103721R1001	1	4.0
6	315	315	OT315E33P	1SCA103723R1001	1	4.4
6	400	400	OT400E33P	1SCA103355R1001	1	4.4
6	630	600	OT630E33P	1SCA107832R1001	1	11.3
6	630	600	OT630E33P31	1SCA111410R1001	1	11.3

Shafts and handles included as standard

Suitable for switches	Included shaft	Included handle	Included terminal bolts
OT200…250_P	OXP6X210	OHB65J6	M8x25
OT315…400_P	OXP12X185	OHB95J12	M10x30
OT630_P	OXP12X185	OHB125J12	M12x40
OT630_P31	OXP12X185	OHB150J12P	M12x40



OTP16BA3MS



OTP16BA3MS
OTP16BA8MS
OTP32BA3MS
OTP32BA8MS

Plastic enclosed switch-disconnectors, 3, 4 and 8 pole, IP 65

Includes selector-type red-yellow handle (I-0 and ON-OFF indication).
Threaded knock-out, compression glands have to be ordered separately.

Number of poles	Ith [A]	Rated operat. current / voltage DC21-A [A]/[VDC]	Cable Outlets / side	Type	Order number	Delivery batch [pcs]	Weight/ unit [kg]
3	25	16/220	2xM20	OTP16BA3MS	1SCA022643R0530	1	0.4
4	25	16/500	2xM25+M16	OTP16BA4MS	1SCA022643R0610	1	0.4
8	25	16/800	2xM25+M16	OTP16BA8MS	1SCA022643R0700	1	0.4
3	32	32/220	2xM25+M16	OTP32BA3MS	1SCA022643R0880	1	0.8
8	32	32/750	2xM25+M16	OTP32BA8MS	1SCA022643R0880	1	0.8

Circuit diagrams

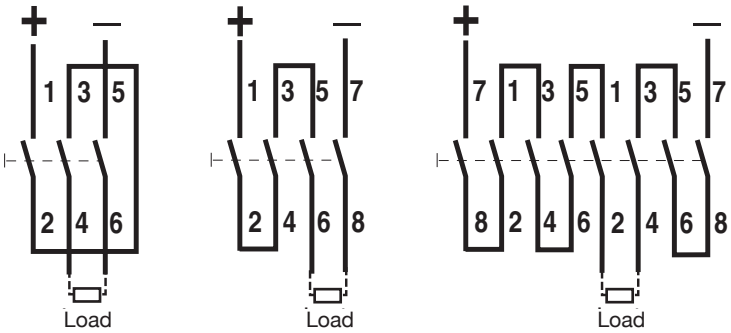

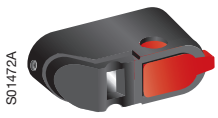

OHBS12



OHBS1



OHRS2



OHRS3

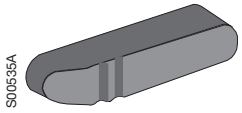

OHBS9

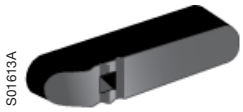

OHB13

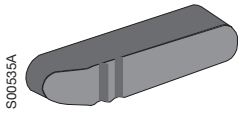

YAST1

Optional handles, base and DIN-rail mounted switches
Handle knobs

Mounting directly to the switch, no shaft needed.

Padlockable with one padlock with bail diameter 5 mm, see the table below

Colour	Handle length [mm]	Suitable for switches	Type	Order number	Units/ type [pcs]
Black	31	OT16...40F3/F4	OHBS1	1SCA109087R1001	10
Black	31	OT16...40F3/F4	OHBS1/1	1SCA109088R1001	1
Red	31	OT16...40F3/F4	OHRS1	1SCA109095R1001	10
Red	31	OT16...40F3/F4	OHRS1 / 1	1SCA109096R1001	1
Black	37	OT16…40F3/F4	OHBS12	1SCA108252R1001	10
Red	37	OT16…40F3/F4	OHRS12	1SCA108253R1001	10
Black	40	OT16...40F6/F8	OHBS2	1SCA109089R1001	10
Black	40	OT16...40F6/F8	OHBS2/1	1SCA109090R1001	1
Red	40	OT16...40F6/F8	OHRS2	1SCA108598R1001	10
Red	40	OT16...40F6/F8	OHRS2/1	1SCA108599R1001	1
Black	39	OT16...40F6/F8	OHBS3	1SCA108320R1001	10
Black	39	OT16...40F6/F8	OHBS3/1	1SCA108319R1001	1
Red	39	OT16...40F6/F8	OHRS3	1SCA108667R1001	10
Red	39	OT16...40F6/F8	OHRS3/1	1SCA108688R1001	1
Black	72	OT160	YAST1	1SCA022301R5350	10
Mounting directly to the switch, a 6 mm shaft can be inserted through the handle					
Black	72	OT160	OHB13	1SCA022712R4620	10

Switch type	Handle type	
	Non-padlockable	Padlockable
OT16...40F3/F4	OHBS1_ , OHRS1_ OHBS2_ , OHRS2_	OHBS12_, OHRS12_
OT16...40F6/F8 + OWP5D1	OHBS3_ , OHRS3_	OHBS2_ , OHRS2_
OT160	OHBS9_ , OHRS9_	
OT160	OHB13	

Handle type the handle cut-out enable*	Shaft through 45 mm	
OHBS1_ , OHRS1_	No	Yes
OHBS2_ , OHRS2_	Yes	Yes
OHBS3_ , OHRS3_	No	Yes
OHBS9_ , OHRS9_	No	No
OH_S12	Yes	Yes
YAST1	No	No
OHB13	Yes	No

*) in I-position the handle shall remain within the cut-out height



S00395A

OH_1_



S00687A

OH_3_



S00396A

OH_2_

Optional handles, base and DIN-rail mounted switches

Selector type handles

Indication I-O and ON-OFF, for shaft diameter 6 mm, door drilling 22.5 mm.
The type and the ordering numbers are for one piece.

Colour	Suitable for switches	Type	Order number	Delivery batch [pcs]
IP 54 handles, NEMA 1				
Black	OT16...40F	OHBS1AH	1SCA102680R1001	150
Yellow-red	OT16...40F	OHYS1AH	1SCA105290R1001	150
Silver	OT16...40F	OHSS1AH	1SCA105274R1001	150
Grey	OT16...40F	OHGS1AH	1SCA105261R1001	150
IP 54 handles, door interlock in ON-position, NEMA 1				
Black	OT16...40F	OHBS1AH1	1SCA105210R1001	150
Yellow-red	OT16...40F	OHYS1AH1	1SCA105291R1001	150
Silver	OT16...40F	OHSS1AH1	1SCA105275R1001	150
Grey	OT16...40F	OHGS1AH1	1SCA105262R1001	150
IP 54 handles, padlockable with one padlock with bail diameter 5...6.3 mm, NEMA 1				
Black	OT16...40F	OHBS3AH	1SCA105234R1001	150
Yellow-red	OT16...40F	OHYS3AH	1SCA105325R1001	150
Silver	OT16...40F	OHSS3AH	1SCA105283R1001	150
Grey	OT16...40F	OHGS3AH	1SCA105270R1001	150
IP 54 handles, padlockable with one padlock with bail diameter 5...6.3 mm, door interlock in ON-position, NEMA 1				
Black	OT16...40F	OHBS3AH1	1SCA105235R1001	150
Yellow-red	OT16...40F	OHYS3AH1	1SCA105326R1001	150
Silver	OT16...40F	OHSS3AH1	1SCA105284R1001	150
Grey	OT16...40F	OHGS3AH1	1SCA105271R1001	150
IP 65 handles, padlockable with max. 3 padlocks with bail diameter 5...8 mm, door interlock in ON-position, defeatable, NEMA 1, 3R, 12				
Black	OT16...40F	OHBS2AJ	1SCA105213R1001	120
Yellow-red	OT16...40F	OHYS2AJ	1SCA105296R1001	120
Silver	OT16...40F	OHSS2AJ	1SCA105278R1001	120
Grey	OT16...40F	OHGS2AJ	1SCA105265R1001	120
IP 65 handles, padlockable with max. 3 padlocks with bail diameter 5...8 mm, door interlock in ON-position, NEMA 1, 3R, 12				
Black	OT16...40F	OHBS2AJ1	1SCA105215R1001	120
Yellow-red	OT16...40F	OHYS2AJ1	1SCA105297R1001	120
Silver	OT16...40F	OHSS2AJ1	1SCA105279R1001	120
Grey	OT16...40F	OHGS2AJ1	1SCA105266R1001	120

Handle with metal hasp

IP65 handles, padlockable with max. 3 padlocks, door interlock in the ON-position, defeatable. NEMA 1, 3R, 12,				
Black	OT16...40F	OHBS2AJEH	1SCA108230R1001	120



OHY_



OHB_



OHB150J12P

Optional handles, base and DIN-rail mounted switches

Pistol type handles

OH_ handles: IP 65, NEMA 1,3R, 12, padlockable with three padlocks in OFF-position, door interlock in ON-position. Screw fixing from the back side of the handle. No screws on the front ensures double insulation. The type and the ordering numbers are for one piece.

Colour length	Handle [mm]	Suitable for switches	Type	Order number	Delivery batch [pcs]	Weight/ unit [kg]
For shaft diameter 6 mm, indication in types OHB and OHY: I-0, ON-OFF, in types OHG: I-0						
Black	45	OT16...40F	OHB45J6	1SCA022380R8770	100	0.1
Yellow-red	45	OT16...40F	OHY45J6	1SCA022380R8930	100	0.1
Grey	45	OT16...40F	OHG45J6	1SCA022380R8850	100	0.1
For shaft diameter 6 mm, indication in types OHB and OHY: I-O, ON-OFF, in types OHG: I-O.						
Black	65	OT160...250_	OHB65J6	1SCA022380R9660	100	0.12
Yellow-red	65	OT160...250_	OHY65J6	1SCA022380R9820	100	0.12
Grey	65	OT160...250_	OHG65J6	1SCA022380R9740	100	0.12
Black	80	OT160...250_	OHB80J6	1SCA022381R0240	100	0.14
Yellow-red	80	OT160...250_	OHY80J6	1SCA022381R0410	100	0.14
Grey	80	OT160...250_	OHG80J6	1SCA022381R0320	100	0.14
For shaft diameter 6 mm, indication: Test-OFF-ON/Test-0-I						
Black	65	OT200...250_	OHB65J6T	1SCA022399R8110	100	0.12
Yellow-red	65	OT200...250_	OHY65J6T	1SCA022456R9540	100	0.12
For shaft diameter 12 mm, indication OHB and OHY: I-0, ON-OFF, in types OHG: I-0						
Black	95	OT315...400_	OHB95J12	1SCA022381R0830	90	0.16
Yellow-red	95	OT315...400_	OHY95J12	1SCA022381R1050	90	0.16
Grey	95	OT315...400_	OHG95J12	1SCA022381R0910	90	0.16
Black	125	OT630_	OHB125J12	1SCA022381R1560	90	0.17
Yellow-red	125	OT630_	OHY125J12	1SCA022381R1720	90	0.17
Grey	125	OT630_	OHG125J12	1SCA022381R1640	90	0.17
Black	145	OT630_	OHB145J12	1SCA022381R2110	90	0.17
Yellow-red	145	OT630_	OHY145J12	1SCA022381R2370	90	0.17
Grey	145	OT630_	OHG145J12	1SCA022381R2290	90	0.17
Black	2x150	OT630_	OHB150J12P	1SCA022865R9430	25	0.35
For shaft diameter 12 mm, indication: Test-OFF-ON/Test-0-I						
Black	95	OT315...400	OHB95J12T	1SCA022736R1750	90	0.16
Yellow-red	95	OT315...400	OHY95J12T	1SCA022736R1910	90	0.16
Black	125	OT630_	OHB125J12T	1SCA022652R2220	90	0.17
Yellow-red	125	OT630_	OHY125J12T	1SCA022652R2310	90	0.17

- Door interlocking in ON-position means that the door can not be opened, when the handle is in ON-position. This can be defeated in IP 65 types to allow authorized personnel access for inspection.
- NEMA 4, 4x pistol handles available on request.
- Handles padlockable in all positions available on request.

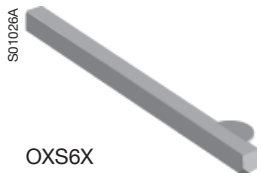

OXS6X

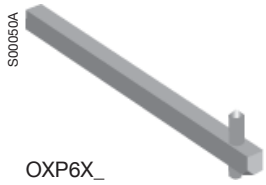

OXP6X_

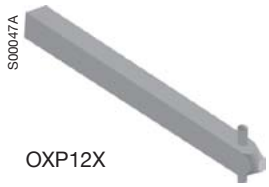

OXP12X

Extended shafts

The type and ordering numbers are for one piece

Shaft length [mm]	H	Suitable for switches	Type	Order number	Delivery batch [pcs]	Weight/ unit [kg]
For selector type handles. Shaft diameter 6 mm.						
85	See	OT16...40F	OXS6X85	1SCA101647R1001	10	0.02
105	dimension	OT16...40F	OXS6X105	1SCA108043R1001	10	0.02
120	drawings	OT16...40F	OXS6X120	1SCA101654R1001	10	0.03
130		OT16...40F	OXS6X130	1SCA101655R1001	10	0.03
160		OT16...40F	OXS6X160	1SCA101656R1001	10	0.04
180		OT16...40F	OXS6X180	1SCA101659R1001	10	0.04
250		OT16...40F	OXS6X250	1SCA101660R1001	10	0.05
330		OT16...40F	OXS6X330	1SCA101661R1001	10	0.05
For pistol type handles. Shaft diameter 6 mm.						
150	See	OT16...40F	OXP6X150	1SCA022295R5600	10	0.05
170	dimension	OT16...40F	OXP6X170	1SCA108224R1001	10	0.05
265	drawings	OT16...40F	OXP6X265	1SCA108225R1001	10	0.08
400		OT16...40F	OXP6X400	1SCA108226R1001	10	0.12
Shaft diameter 6 mm [1]						
130	105 ... 135	OT160	OXP6X130	1SCA022057R0570	1	0.04
150	125 ... 155	OT160	OXP6X150	1SCA022295R5600	1	0.05
210	185 ... 215	OT160	OXP6X210	1SCA022295R6080	1	0.06
130	109…174	OT200...250_	OXP6X130	1SCA022057R0570	1	0.04
150	129…194	OT200...250_	OXP6X150	1SCA022295R5600	1	0.05
161	140...205	OT200...250_	OXP6X161	1SCA022067R1760	1	0.05
210	189…254	OT200...250_	OXP6X210	1SCA022295R6080	1	0.06
290	269…334	OT200...250_	OXP6X290	1SCA022042R6370	1	0.08
Shaft diameter 12 mm						
166	146…226	OT315...400_	OXP12X166	1SCA022325R7100	1	0.2
185	165…245	OT315...400_	OXP12X185	1SCA022325R6710	1	0.2
250	230…310	OT315...400_	OXP12X250	1SCA022325R6980	1	0.28
280	260…340	OT315...400_	OXP12X280	1SCA022137R5140	1	0.3
325	305…385	OT315...400_	OXP12X325	1SCA022042R5810	1	0.36
395	445…525	OT315...400_	OXP12X395	1SCA022042R5990	1	0.43
465	439…519	OT315...400_	OXP12X465	1SCA022042R6020	1	0.51
535	515...595	OT315...400_	OXP12X535	1SCA022042R6110	1	0.59
250	230…345	OT630_	OXP12X250	1SCA022325R6980	1	0.28
280	260…375	OT630_	OXP12X280	1SCA022137R5140	1	0.3
325	305…420	OT630_	OXP12X325	1SCA022042R5810	1	0.36
395	375…490	OT630_	OXP12X395	1SCA022042R5990	1	0.43
465	445…560	OT630_	OXP12X465	1SCA022042R6020	1	0.51
535	515…630	OT630_	OXP12X535	1SCA022042R6110	1	0.59
With OHB150J12P handle						
250	222…336	OT630_	OXP12X250	1SCA022325R6980	1	0.28
280	252…366	OT630_	OXP12X280	1SCA022137R5140	1	0.3
325	297…411	OT630_	OXP12X325	1SCA022042R5810	1	0.36
395	367…481	OT630_	OXP12X395	1SCA022042R5990	1	0.43
465	437…551	OT630_	OXP12X465	1SCA022042R6020	1	0.51
535	507…621	OT630_	OXP12X535	1SCA022042R6110	1	0.59

1) Longer shafts on request

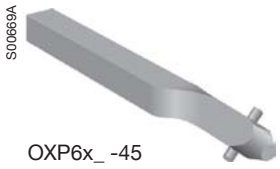

OXP6x_ -45



OHZX10



OHZX14

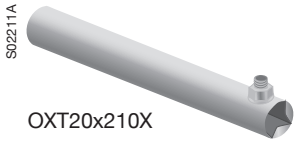

OXT20x210X

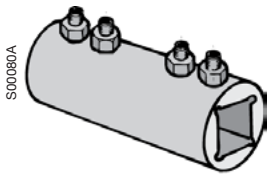

OETLZX95, OESAZX167

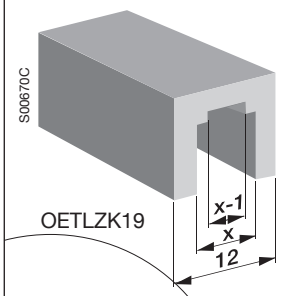

OETLZK19

Extended shafts

Twisted shafts for pistol type handles, the shaft position is rotated 45 degrees.
The type and the ordering numbers are for one piece.

Shaft length [mm]	H [mm]	Suitable for switches	Type	Order number	Delivery batch [pcs]	Weight/ unit [kg]
For pistol type handles. Shaft diameter 6 mm.						
150	See	OT16...40F	OXP6X150-45	1SCA022294R4400	10	0.05
170	dimension	OT16...40F	OXP6X170-45	1SCA108227R1001	10	0.05
265	drawings	OT16...40F	OXP6X265-45	1SCA108228R1001	10	0.08
400		OT16...40F	OXP6X400-45	1SCA108229R1001	10	0.12
130	109...174	OT200...250_	OXP6X130-45	1SCA022355R9110	1	0.04
150	129...194	OT200...250_	OXP6X150-45	1SCA022294R4400	1	0.05
210	189...254	OT200...250_	OXP6X210-45	1SCA022294R4230	1	0.06
290	269...334	OT200...250_	OXP6X290-45	1SCA022304R4290	1	0.08
Shaft diameter 12 mm						
250	230...310	OT315...400_	OXP12X250-45	1SCA022293R9400	1	0.28
280	260...340	OT315...400_	OXP12X280-45	1SCA022382R0800	1	0.3
325	305...385	OT315...400_	OXP12X325-45	1SCA022304R4450	1	0.36
395	445...525	OT315...400_	OXP12X395-45	1SCA022749R0640	1	0.43
465	439...519	OT315...400_	OXP12X465-45	1SCA022423R1770	1	0.51
535	515...595	OT315...400_	OXP12X535-45	1SCA022723R2940	1	0.59

Shaft alignment ring

Improves the handle operation if a handle and a shaft have been poorly aligned.
The type and the ordering numbers are for one piece.

For pistol type handles OH_65...275J6...12.					
Black	OHZX10	1SCA022661R3610	10	0.23
For selector type handles OH_1...3					
Black	OHZX11	1SCA022708R3610	10	0.23

Extension ring for pistol type handles

Black	OHB_	OHZX14	1SCA022851R6590	1	0.06

Shaft tube

Supporting 12 mm shafts longer than 280 mm

OXT20x210X	1SCA103684R1001	1	1.5

Shaft extension socket

For extending the shaft of combination attachment. The type and the ordering numbers are for one piece.

Shaft diameter [mm]	Type	Order number	Units/ unit [pcs]	Weight/ type [kg]
6	OESAZX167	1SCA022190R1560	1	0.03
12	OETLZX95	1SCA022083R5620	1	0.04

Adapter for extension socket

The adapter can be placed inside the extension socket OETLZX95.

6	OETLZK19	1SCA022093R1850	1	0.02

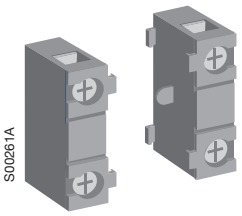

OA1G_OA3G01

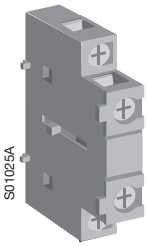

OA2G11



Auxiliary contacts mounted on both sides of the switch

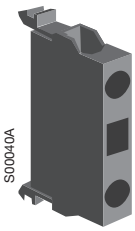

OBEA_

Auxiliary contact blocks, IP 20

Contact numbering according to EN 50013.
The type and and the ordering numbers are for one piece.

Suitable for switches	Function	Type	Order number	Delivery batch[4] [pcs]	Weight/ unit [kg]
Snap-on mounting to the side of the switch					
I_{th} = 16A, cable cross section max. 2 x 2.5 mm². Early-break type OA1G10					
Mountable on left side, max. 2 pcs					
OT 16...40F_, FT_	1NC	OA1G01	1SCA022353R4890	10	0.03
OT 16...40F_, FT_	1NC	OA1G01AU[1]	1SCA022436R7830	10	0.03
Mountable on the right side, max. 2 pcs					
OT 16...40F_, FT_	1NO	OA1G10	1SCA022353R4970	10	0.03
OT 16...40F_, FT_	1NO	OA1G10AU[1]	1SCA022436R7910	10	0.03
Mountable on both sides					
OT 16...40: max. 2NO+2NC, OT63...125: max. 4NO+4NC[3]					
OT 16...40F_	1NO+1NC	OA2G11[2]	1SCA022379R8100	10	0.03
Mounting with adapter to the side of the switch					
I_{th} = 16A, cable cross section max. 2 x 2.5 mm². Mounting with the adapter OAZX1, max. 2 blocks/side.					
OT160E_, ET_	1NO+1NC	OA2G11	1SCA022379R8100	10	0.03
Mounting with adapter on top of the switch					
I_{th} = 10 A. Cable cross section 0.5 mm2...2 x 2.5 mm². Insulation voltage U_i 690 V. Mounting with the adapter OEZNP1, max. 6 aux. blocks. Early break type.					
OT160E_	1NO	OBEA10	1SCA022190R3000	10	0.02
OT160E_	1NO	OBEA10AU[1]	1SCA022185R3310	10	0.02
OT160E_	1NC	OBEA01	1SCA022190R3260	10	0.02
OT160E_	1NC	OBEA01AU[1]	1SCA022185R3730	10	0.02
Mounting on the left side of the switch or under the mechanism cover					
Mounting on the left side of the switch: Max. 8 auxiliary contact blocks with the OEA28 module. Mounting under the mechanism cover: ***OT200-250:*** Max. 4 test contacts or 2 test contacts + 2 test indication contacts. ***OT315-630:*** Max. 4 test contacts + 4 test indication contacts. The test contacts can be used as standard auxiliary contacts as well.					
OT200...630	1NO	OA1G10	1SCA022353R4970	10	0.03
OT200...630	1NC	OA3G01	1SCA022456R7410	10	0.03

1) Types _AU are gold plated for extremely difficult circumstances and low voltages.
2) Not mountable on the same side as the fourth pole.
3) Contact numbering:
(83) (43) (53) 13 21 (61) (31) (71)
(84) (44) (54) 14 22 (62) (32) (72)
4) Auxiliary contacts OA1G_ are available in larger packing as well.
A bulk package includes 50 auxiliary contacts. Type number: add a suffix: **/B**, e.g. OA1G01**/B.**
Early break type auxiliary contacts means that in the switches, the NO aux.contacts break before the main contacts open.

Performance data according to IEC 60947-5-1

For OA1G_, OA2G_, OA3G_							For OBEA_ and OZXK_			
Ue/[V]	AC15	Ue/[V]	DC12		DC13		AC12		DC12	
	Ie/[A]		Ie/[A]	P/[W]	Ie/[A]	P/[W]	Ue/[V]	Ie/[A]	Ue/[V]	Ie/[A]
230	6	24	10	240	2	50	120	8	125	1.1
400	4	72	4	290	0.8	60	240	6	250	0.55
415	4	125	2	250	0.55	70	400	4	440	0.31
690	2	250	0.55	140	0.27	70	415	4	500	0.27
		440	0.1	44			480	3	600	0.2
							500	3		
							690	2		

OT16...40F8 switch-disconnector

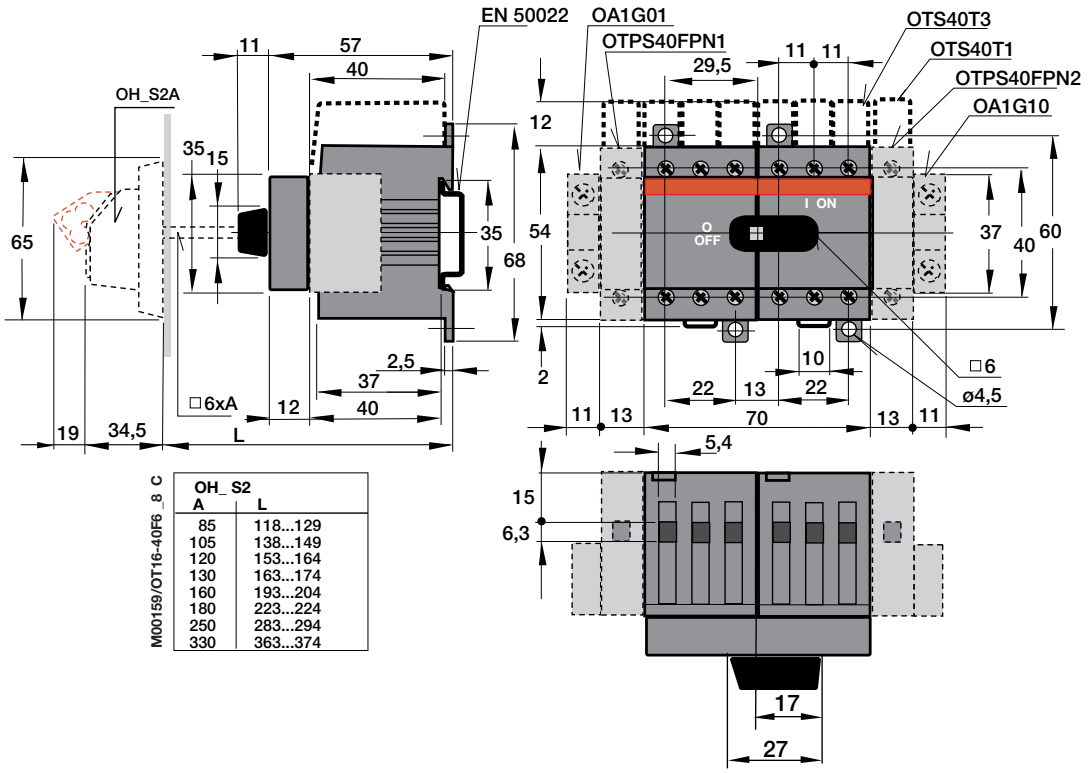

OH_S2 A	L
85	118...129
105	138...149
120	153...164
130	163...174
160	193...204
180	223...224
250	283...294
330	363...374

OT160E4 switch-disconnector

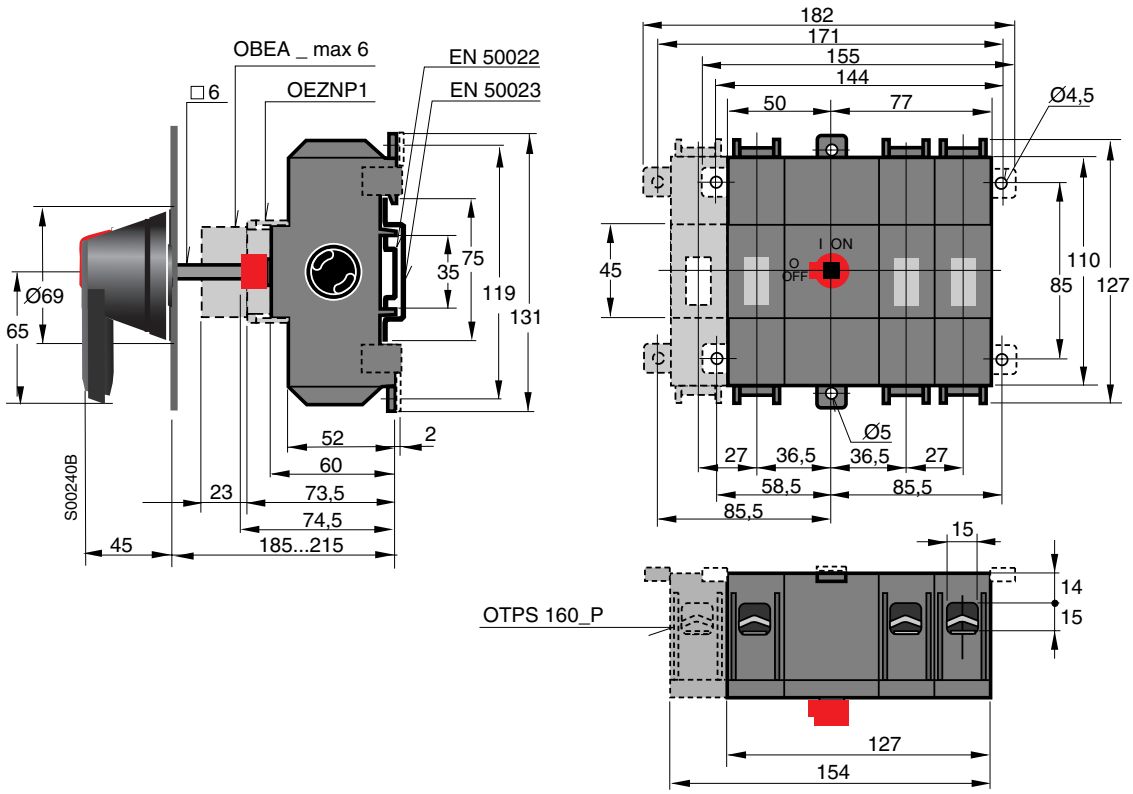

OT200-250E23/33P switch-disconnector

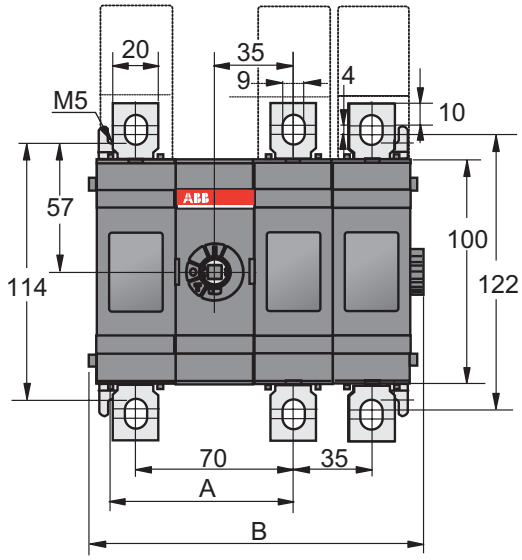

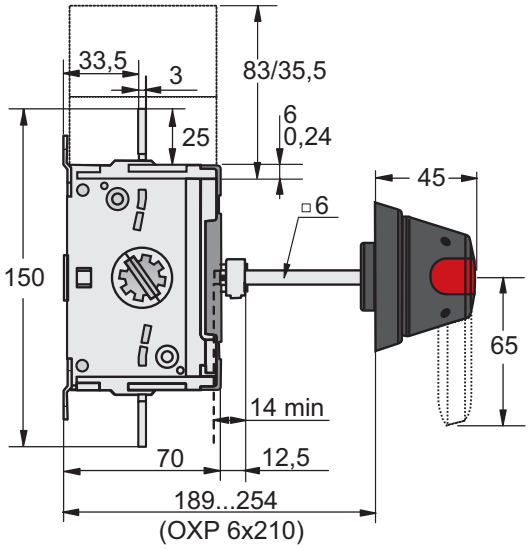

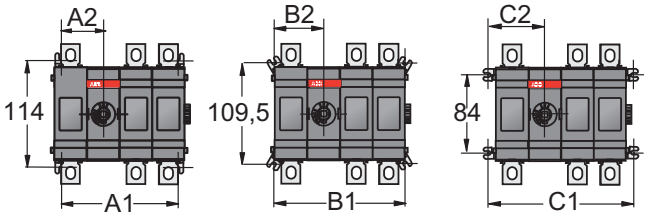

M00017/OT200_250E11_22 G

	OT200/250	
	E23	E33
A	115	150
B	220,5	255,5
A1	195	230
A2	80	115
B1	211	246
B2	88	123
C1	225	260
C2	95	130

OT315-400E23/33P switch-disconnector

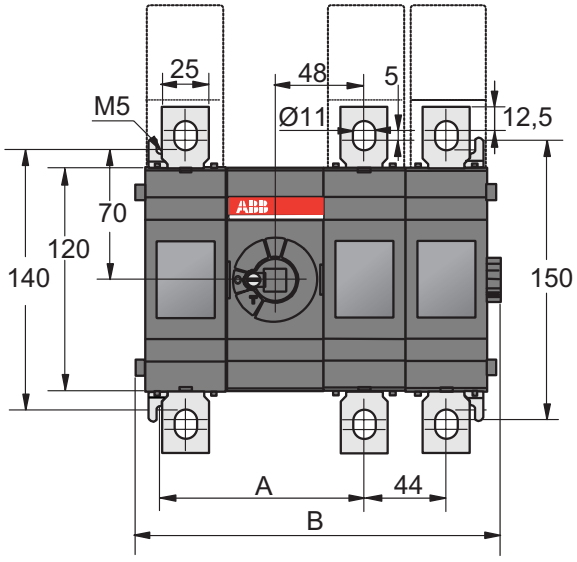

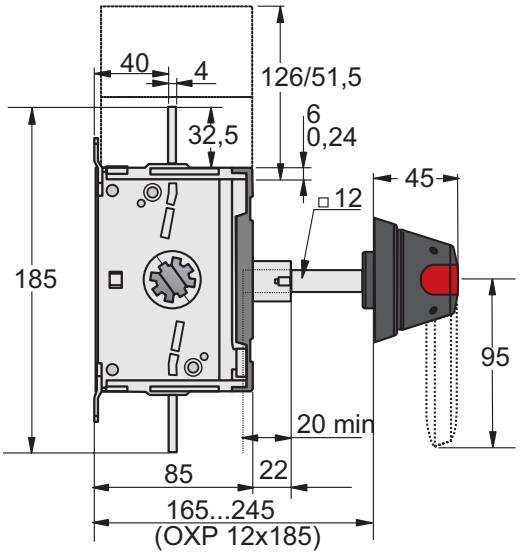

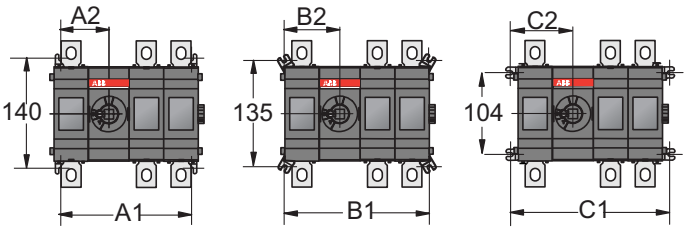

M00018/OT315_400E11_22 F

	OT315/400	
	E23	E33
A	153	197
B	284	328
A1	254	298
A2	105	149
B1	272	316
B2	114	158
C1	290	334
C2	123	167

OT630E11/33P switch-disconnector

mm
in

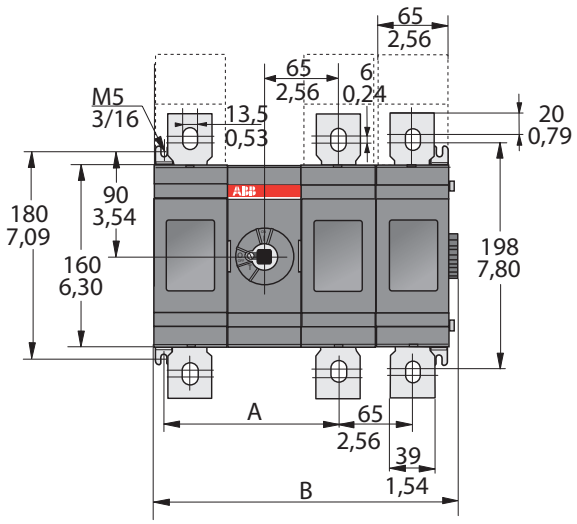

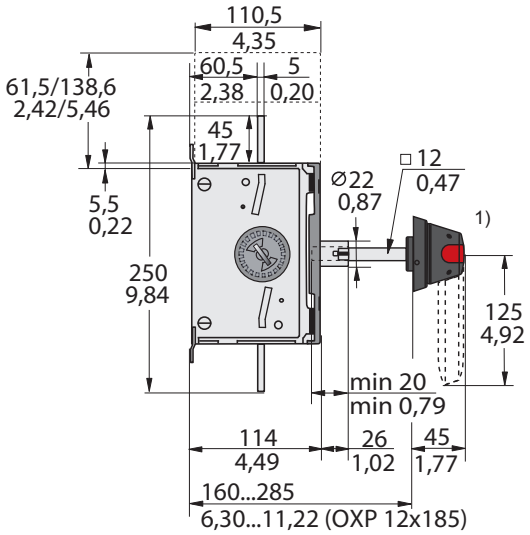

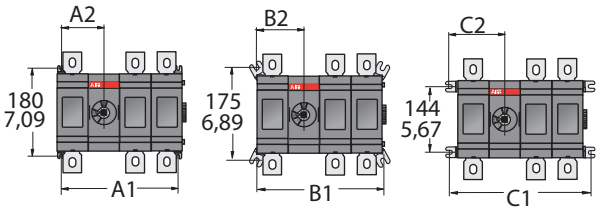

M00082 / OT630-800_11_22 D

	OT600/630/800					
	E11	E12	E13	E22	E23	E33
	mm / in	mm / in	mm / in	mm / in	mm / in	mm / in
A	153,5 / 6,04	153,5 / 6,04	153,5 / 6,04	218,5 / 8,60	218,5 / 8,60	283,5 / 11,16
B	201 / 7,91	266 / 10,47	331 / 13,03	331 / 13,03	396 / 15,59	461 / 18,15
A1	177 / 6,97	242 / 9,53	307 / 12,09	307 / 12,09	372 / 14,65	437 / 17,20
A2	88,5 / 3,48	88,5 / 3,48	88,5 / 3,48	153,5 / 6,04	153,5 / 6,04	218,5 / 8,60
B1	195 / 7,68	260 / 10,24	325 / 12,80	325 / 12,80	390 / 15,35	455 / 17,91
B2	97,5 / 3,84	97,5 / 3,84	97,5 / 3,84	162,5 / 6,40	162,5 / 6,40	227,5 / 8,96
C1	213 / 8,39	278 / 10,94	343 / 13,50	343 / 13,50	408 / 16,06	473 / 18,62
C2	106,5 / 4,19	106,5 / 4,19	106,5 / 4,19	171,5 / 6,75	171,5 / 6,75	236,5 / 9,31

1) the butterfly handle length is 2x150 mm

Enclosed switch-disconnectors

OTP 16BA3MS

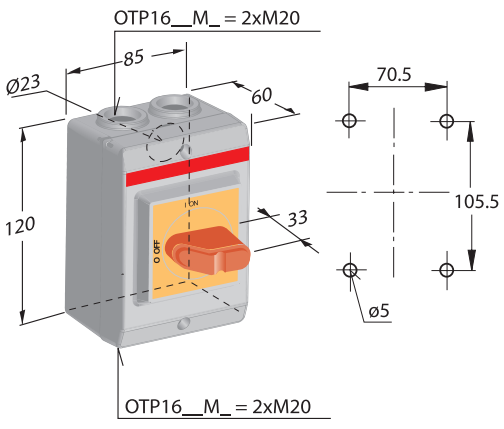

OTP 16BA4MS
OTP 32BA3MS

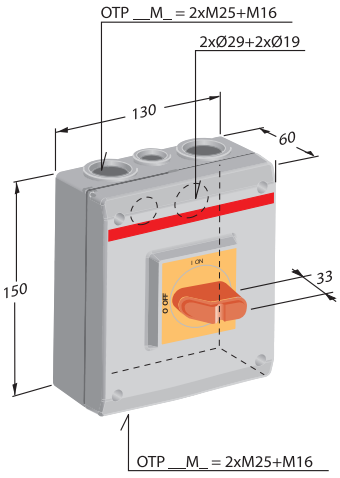

OTP 16BA8MS
OTP 32BA8MS

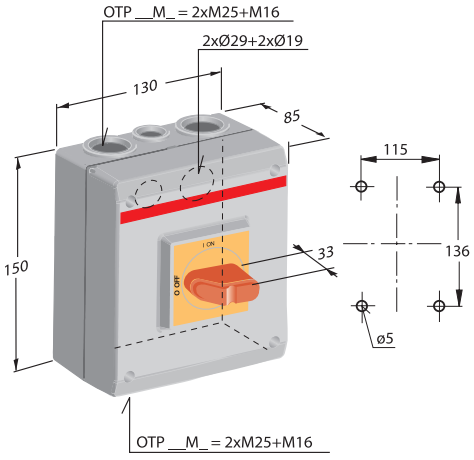

Index

Type	Order number	Page	Description
OA1G01	1SCA022353R4890	15	Auxiliary contact blocks
OA1G01AU1)	1SCA022436R7830	15	Auxiliary contact blocks
OA1G10	1SCA022353R4970	15	Auxiliary contact blocks
OA1G10AU1)	1SCA022436R7910	15	Auxiliary contact blocks
OA2G11	1SCA022379R8100	15	Auxiliary contact blocks
OA3G01	1SCA022456R7410	15	Auxiliary contact blocks
OBEA01	1SCA022190R3260	15	Auxiliary contact blocks
OBEA01AU1)	1SCA022185R3730	15	Auxiliary contact blocks
OBEA10	1SCA022190R3000	15	Auxiliary contact blocks
OBEA10AU1)	1SCA022185R3310	15	Auxiliary contact blocks
OESAZX167	1SCA022190R1560	14	Shaft extension socket
OETLZK19	1SCA022093R1850	14	Adapter for extension socket
OETLZX95	1SCA022083R5620	14	Shaft extension socket
OHB125J12	1SCA022381R1560	12	Optional handles
OHB125J12T	1SCA022652R2220	12	Optional handles
OHB13	1SCA022712R4620	10	Optional handles
OHB145J12	1SCA022381R2110	12	Optional handles
OHB150J12P	1SCA022865R9430	12	Optional handles
OHB45J6	1SCA022380R8770	12	Optional handles
OHB65J6	1SCA022380R9660	12	Optional handles
OHB65J6T	1SCA022399R8110	12	Optional handles
OHB80J6	1SCA022381R0240	12	Optional handles
OHB95J12	1SCA022381R0830	12	Optional handles
OHB95J12T	1SCA022736R1750	12	Optional handles
OHBS1	1SCA109087R1001	10	Optional handles
OHBS1/1	1SCA109088R1001	10	Optional handles
OHBS12	1SCA108252R1001	10	Optional handles
OHBS1AH	1SCA102680R1001	11	Optional handles
OHBS1AH1	1SCA105210R1001	11	Optional handles
OHBS2	1SCA109089R1001	10	Optional handles
OHBS2/1	1SCA109090R1001	10	Optional handles
OHBS2AJ	1SCA105213R1001	11	Optional handles
OHBS2AJ1	1SCA105215R1001	11	Optional handles
OHBS2AJEH	1SCA108230R1001	11	Optional handles
OHBS3	1SCA108320R1001	10	Optional handles
OHBS3/1	1SCA108319R1001	10	Optional handles
OHBS3AH	1SCA105234R1001	11	Optional handles
OHBS3AH1	1SCA105235R1001	11	Optional handles
OHBS9	1SCA108665R1001	10	Optional handles
OHBS9/1	1SCA108689R1001	10	Optional handles
OHG125J12	1SCA022381R1640	12	Optional handles
OHG145J12	1SCA022381R2290	12	Optional handles
OHG45J6	1SCA022380R8850	12	Optional handles
OHG65J6	1SCA022380R9740	12	Optional handles
OHG80J6	1SCA022381R0320	12	Optional handles
OHG95J12	1SCA022381R0910	12	Optional handles
OHGS1AH	1SCA105261R1001	11	Optional handles
OHGS1AH1	1SCA105262R1001	11	Optional handles
OHGS2AJ	1SCA105265R1001	11	Optional handles
OHGS2AJ1	1SCA105266R1001	11	Optional handles
OHGS3AH	1SCA105270R1001	11	Optional handles
OHGS3AH1	1SCA105271R1001	11	Optional handles
OHRS1	1SCA109095R1001	10	Optional handles
OHRS1 / 1	1SCA109096R1001	10	Optional handles
OHRS12	1SCA108253R1001	10	Optional handles
OHRS2	1SCA108598R1001	10	Optional handles
OHRS2/1	1SCA108599R1001	10	Optional handles
OHRS3	1SCA108667R1001	10	Optional handles
OHRS3/1	1SCA108688R1001	10	Optional handles
OHRS9	1SCA108666R1001	10	Optional handles
OHRS9/1	1SCA108690R100	10	Optional handles
OHSS1AH	1SCA105274R1001	11	Optional handles
OHSS1AH1	1SCA105275R1001	11	Optional handles
OHSS2AJ	1SCA105278R1001	11	Optional handles
OHSS2AJ1	1SCA105279R1001	11	Optional handles
OHSS3AH	1SCA105283R1001	11	Optional handles
OHSS3AH1	1SCA105284R1001	11	Optional handles
OHY125J12	1SCA022381R1720	12	Optional handles
OHY125J12T	1SCA022652R2310	12	Optional handles
OHY145J12	1SCA022381R2370	12	Optional handles
OHY45J6	1SCA022380R8930	12	Optional handles
OHY65J6	1SCA022380R9820	12	Optional handles
OHY65J6T	1SCA022456R9540	12	Optional handles
OHY80J6	1SCA022381R0410	12	Optional handles
OHY95J12	1SCA022381R1050	12	Optional handles
OHY95J12T	1SCA022736R1910	12	Optional handles
OHYS1AH	1SCA105290R1001	11	Optional handles
OHYS1AH1	1SCA105291R1001	11	Optional handles
OHYS2AJ	1SCA105296R1001	11	Optional handles
OHYS2AJ1	1SCA105297R1001	11	Optional handles
OHYS3AH	1SCA105325R1001	11	Optional handles
OHYS3AH1	1SCA105326R1001	11	Optional handles
OHZX10	1SCA022661R3610	14	Shaft alignment ring
OHZX11	1SCA022708R3610	14	Shaft alignment ring
OHZX14	1SCA022851R6590	14	Extension ring for pistol type handles
OT160E41	1SCA022259R8060	7	Front operated switch-disconnector
OT16F8	1SCA104836R1001	7	Front operated switch-disconnector
OT200E23P	1SCA103713R1001	7	Front operated switch-disconnector
OT200E33P	1SCA103719R1001	8	Front operated switch-disconnector
OT250E23P	1SCA103715R1001	7	Front operated switch-disconnector
OT250E33P	1SCA103721R1001	8	Front operated switch-disconnector
OT25F8	1SCA104882R1001	7	Front operated switch-disconnector
OT315E23P	1SCA101113R1001	7	Front operated switch-disconnector
OT315E33P	1SCA103723R1001	8	Front operated switch-disconnector
OT400E23P	1SCA103717R1001	7	Front operated switch-disconnector
OT400E33P	1SCA103355R1001	8	Front operated switch-disconnector
OT40F8	1SCA104938R1001	7	Front operated switch-disconnector
OT630E23P	1SCA110644R1001	7	Front operated switch-disconnector
OT630E23P31	1SCA111409R1001	7	Front operated switch-disconnector
OT630E33P	1SCA107832R1001	8	Front operated switch-disconnector
OT630E33P31	1SCA111410R1001	8	Front operated switch-disconnector
OTP16BA3MS	1SCA022643R0530	9	Plastic enclosed switch-disconnectors
OTP16BA4MS	1SCA022643R0610	9	Plastic enclosed switch-disconnectors
OTP16BA8MS	1SCA022643R0700	9	Plastic enclosed switch-disconnectors
OTP32BA3MS	1SCA022643R0880	9	Plastic enclosed switch-disconnectors
OXP12X166	1SCA022325R7100	13	Extended shafts
OXP12X185	1SCA022325R6710	13	Extended shafts
OXP12X250	1SCA022325R6980	13	Extended shafts
OXP12X250-45	1SCA022293R9400	14	Extended shafts
OXP12X280	1SCA022137R5140	13	Extended shafts
OXP12X280-45	1SCA022382R0800	14	Extended shafts
OXP12X325	1SCA022042R5810	13	Extended shafts
OXP12X325-45	1SCA022304R4450	14	Extended shafts
OXP12X395	1SCA022042R5990	13	Extended shafts
OXP12X395-45	1SCA022749R0640	14	Extended shafts
OXP12X465	1SCA022042R6020	13	Extended shafts
OXP12X465-45	1SCA022423R1770	14	Extended shafts
OXP12X535	1SCA022042R6110	13	Extended shafts
OXP12X535-45	1SCA022723R2940	14	Extended shafts
OXP6X130	1SCA022057R0570	13	Extended shafts
OXP6X130-45	1SCA022355R9110	14	Extended shafts
OXP6X150	1SCA022295R5600	13	Extended shafts
OXP6X150-45	1SCA022294R4400	14	Extended shafts
OXP6X161	1SCA022067R1760	13	Extended shafts
OXP6X170	1SCA108224R1001	13	Extended shafts
OXP6X170-45	1SCA108227R1001	14	Extended shafts
OXP6X210	1SCA022295R6080	13	Extended shafts
OXP6X210-45	1SCA022294R4230	14	Extended shafts
OXP6X265	1SCA108225R1001	13	Extended shafts
OXP6X265-45	1SCA108228R1001	14	Extended shafts
OXP6X290	1SCA022042R6370	13	Extended shafts
OXP6X290-45	1SCA022304R4290	14	Extended shafts
OXP6X400	1SCA108226R1001	13	Extended shafts
OXP6X400-45	1SCA108229R1001	14	Extended shafts
OXS6X105	1SCA108043R1001	13	Extended shafts
OXS6X120	1SCA101654R1001	13	Extended shafts
OXS6X130	1SCA101655R1001	13	Extended shafts
OXS6X160	1SCA101656R1001	13	Extended shafts
OXS6X180	1SCA101659R1001	13	Extended shafts
OXS6X250	1SCA101660R1001	13	Extended shafts
OXS6X330	1SCA101661R1001	13	Extended shafts
OXS6X85	1SCA101647R1001	13	Extended shafts
OXT20x210X	1SCA103684R1001	14	Shaft tube
YAST1	1SCA022301R5350	10	Optional handles

Printed by: Wasa Graphics Oy, Vaasa Finland
Produced by: WILMA, Vaasa Finland 09-05



ABB Oy
Low Voltage Products
P.O. Box 622
FI-65101 VAASA, Finland
Telephone +358 10 22 11
Telefax +358 10 22 45708
www.abb.com

The technical data and dimensions are valid at the time of printing. We reserve the right to subsequent alterations.

1SCC301009K0201
OT40GB 09-02