32009 X/Q

Dimensions

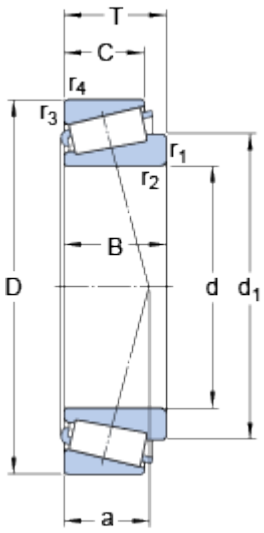

d		45	mm
D		75	mm
T		20	mm
d_1	≈	60.73	mm
B		20	mm
C		15.5	mm
$r_{1,2}$	min.	1	mm
$r_{3,4}$	min.	1	mm
a		16	mm

Abutment dimensions

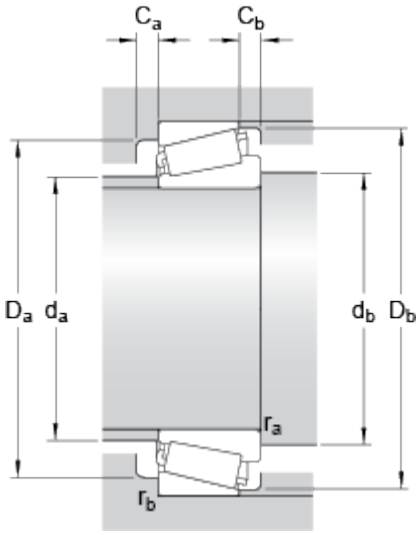

d_a	max.	51	mm
d_b	min.	51	mm
D_a	min.	67	mm
D_a	max.	69	mm
D_b	min.	72	mm
C_a	min.	4	mm
C_b	min.	4.5	mm
r_a	max.	1	mm
r_b	max.	1	mm

Calculation data

Basic dynamic load rating	C	58.3	kN
Basic static load rating	C_0	80	kN
Fatigue load limit	P_u	8.8	kN
Reference speed		6300	r/min
Limiting speed		8500	r/min
Calculation factor	e	0.4	
Calculation factor	Y	1.5	

Calculation factor	Y_0	0.8	

Mass

Mass bearing		0.344	kg