

Image may differ from product. See technical specification for details.

# SIR 30 ES

**Rod end, requires maintenance, female thread with clamping screws**

These SKF rod ends contain a spherical plain bearing with a steel/steel sliding contact surface combination. The bearing requires maintenance and can be relubricated via grease fitting in the housing and via the shaft. The female thread is available with a left- (prefix SIL) or right-hand thread.

- Easy to relubricate
- Suitable for heavy static, alternating or impact loads
- Simple and ready-to-mount
- Slotted shank with clamping screws
- Suitable for hydraulic cylinders
- Bearing can be exchanged

# Overview

## Dimensions

| | |
|---|---|
| Bore diameter, bearing inner ring | 30 mm |
| Outside diameter, housing eye | 66 mm |
| Width, bearing inner ring | 22 mm |
| Thread designation | M 22x1.5 |
| Width, housing eye | 28.5 mm |
| Centre height, housing (from end of shank) | 60 mm |
| Housing length, total | 95 mm |

## Performance

| | |
|---|---|
| Basic dynamic load rating | 62 kN |
| Basic static load rating | 78 kN |

## Properties

| | |
|---|---|
| Sliding contact surface combination | Steel/steel, standard |
| Material, housing | Steel |
| Material, inner ring | Bearing steel |
| Material, outer ring | Bearing steel |
| Maintenance | Relubrication required |
| Attachment feature, rod end shank | Right-hand female thread and clamping screws |
| Sealing | Without |

## Logistics

| | |
|---|---|
| Product net weight | 0.729 kg |
| eClass code | 23-05-01-05 |
| UNSPSC code | 31171508 |

## Technical specification

| | |
|---|---|
| Maintenance | Relubrication required |
| Sliding contact surface combination | Steel/steel, standard |
| Material, inner ring | Bearing steel |
| Material, outer ring | Bearing steel |
| Sealing | Without |
| Attachment feature, rod end shank | Right-hand female thread and clamping screws |

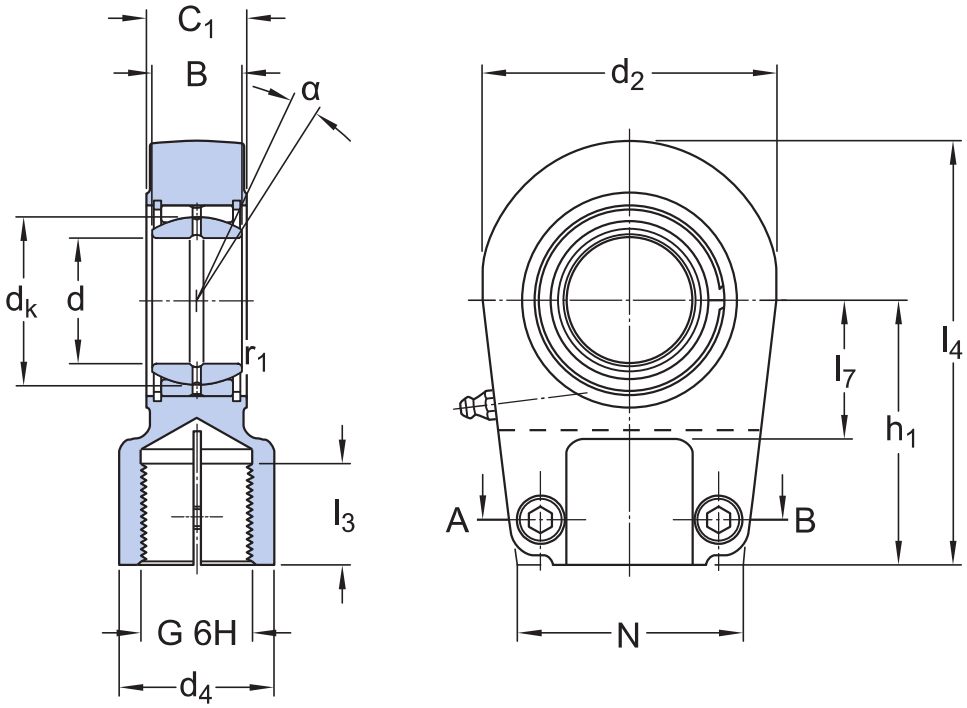

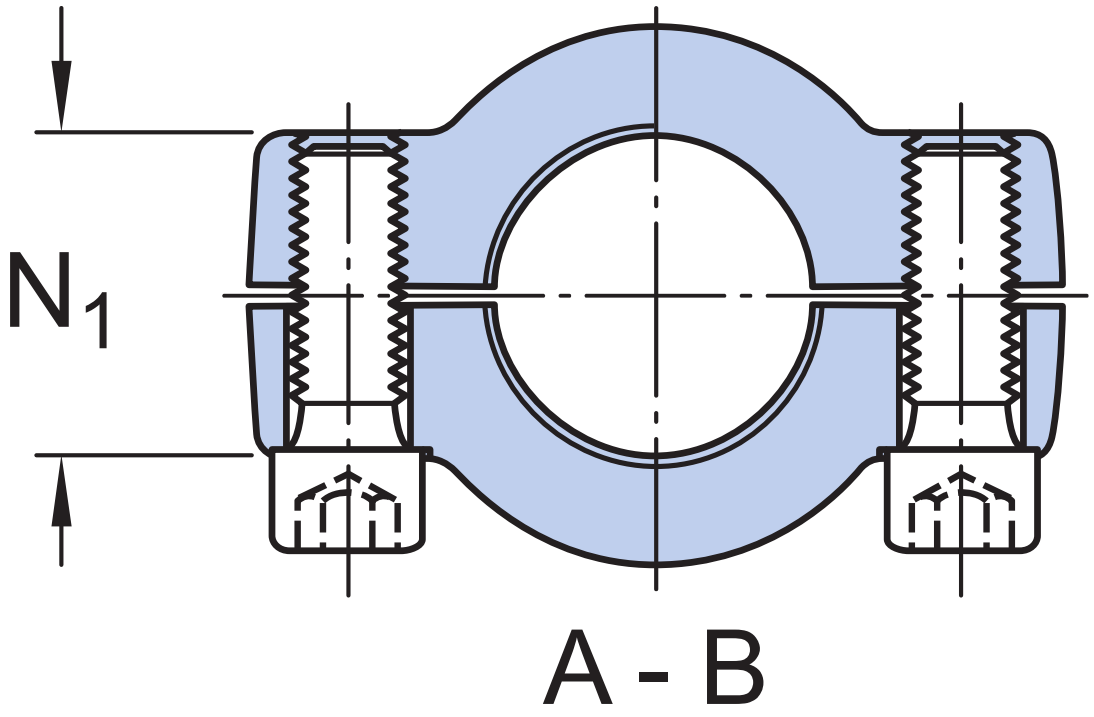


## Dimensions

| | | |
|---|---|---|
| d | 30 mm | Bore diameter |
| $d_2$ | max. 66 mm | Diameter head |
| B | 22 mm | Width inner ring |
| G | M 22x1.5 | Thread |
| $C_1$ | max. 28.5 mm | Width head |
| $h_1$ | 60 mm | Height shank end face - centre rod end eye |
| α | 6 ° | Angle of tilt |
| $d_k$ | 40.7 mm | Raceway diameter inner ring |
| $d_4$ | max. 33 mm | Housing diameter shank |
| $l_3$ | min. 23 mm | Length thread |
| $l_4$ | max. 95 mm | Length (height) housing |
| $l_7$ | min. 29 mm | Distance shank chamfer - centre rod end eye |
| N | max. 50 mm | Width shank |
| $N_1$ | max. 28.5 mm | Thickness shank base for clamping bolts |
| $r_1$ | min. 0.6 mm | Chamfer dimension bore |

## Bolts with internal hexagon

| | |
|---|---|
| Size bolt with internal hexagon | M 8 |
| Tightening torque bolt with internal hexagon | 23 N·m |

## Calculation data

| | | |
|---|---|---|
| Basic dynamic load rating | C | 62 kN |
| Basic static load rating | $C_0$ | 78 kN |
| Specific dynamic load factor | K | 100 N/mm$^2$ |
| Material constant | $K_M$ | 330 |

## Tolerances and clearances

- General bearing specifications

## More Information

### Product details

- Rod ends bearings requiring maintenance
- Maintenance-free rod ends
- General rod end specifications
- Temperature limits

### Engineering information

- Principles of selection

### Tools

- SKF Product select

# Terms of use

By accessing and using this website / app owned and published by AB SKF (publ.) (556007-3495 · Gothenburg) (“SKF”), you agree to the following terms and conditions:

**Warranty Disclaimer and Limitation of Liability**
Although every care has been taken to assure the accuracy of the information on this website / app, SKF provides this information "AS IS" and DISCLAIMS ALL WARRANTIES, EXPRESS OR IMPLIED, INCLUDING, BUT NOT LIMITED TO, IMPLIED WARRANTIES OF MERCHANTABILITY AND FITNESS FOR A PARTICULAR PURPOSE. You acknowledge that your use of this website / app is at your sole risk, that you assume full responsibility for all costs associated with use of this website / app, and that SKF shall not be liable for any direct, incidental, consequential, or indirect damages of any kind arising out of your access to, or use of the information or software made available on this website / app.

Any warranties and representations in this website / app for SKF products or services that you purchase or use will be subject to the agreed upon terms and conditions in the contract for such product or service.

Further, for non-SKF websites / apps that are referenced in our website / app or where a hyperlink appears, SKF makes no warranties concerning the accuracy or reliability of the information in these websites / apps and assumes no responsibility for material created or published by third parties contained therein. In addition, SKF does not warrant that this website / app or these other linked websites / apps are free from viruses or other harmful elements.

**Third Party Services**
When viewing YouTube content via the SKF website(s) (i.e. using YouTube API Services), you agree to be bound by the YouTube Terms of Service.

**Copyright**
Copyright in this website / app copyright of the information and software made available on this website / app rest with SKF or its licensors. All rights are reserved. All licensed material will reference the licensor that has granted SKF the right to use the material. The information and software made available on this website / app may not be reproduced, duplicated, copied, transferred, distributed, stored, modified, downloaded or otherwise exploited for any commercial use without the prior written approval of SKF. However, it may be reproduced, stored and downloaded for use by individuals without prior written approval of SKF. Under no circumstances may this information or software be supplied to third parties.

This website /app includes certain images used under license from Shutterstock, Inc.

**Trademarks and Patents**
All trademarks, brand names, and corporate logos displayed on the website / app are the property of SKF or its licensors, and may not be used in any way without prior written approval by SKF. All licensed trademarks published on this website / app reference the licensor that has granted SKF the right to use the trademark. Access to this website / app does not grant to the user any license under any patents owned by or licensed to SKF.

**Changes**
SKF reserves the right to make changes or additions to this website / app at any time.