E11992

Jumper cable with valve plug

AVDAB031PLS0010H03

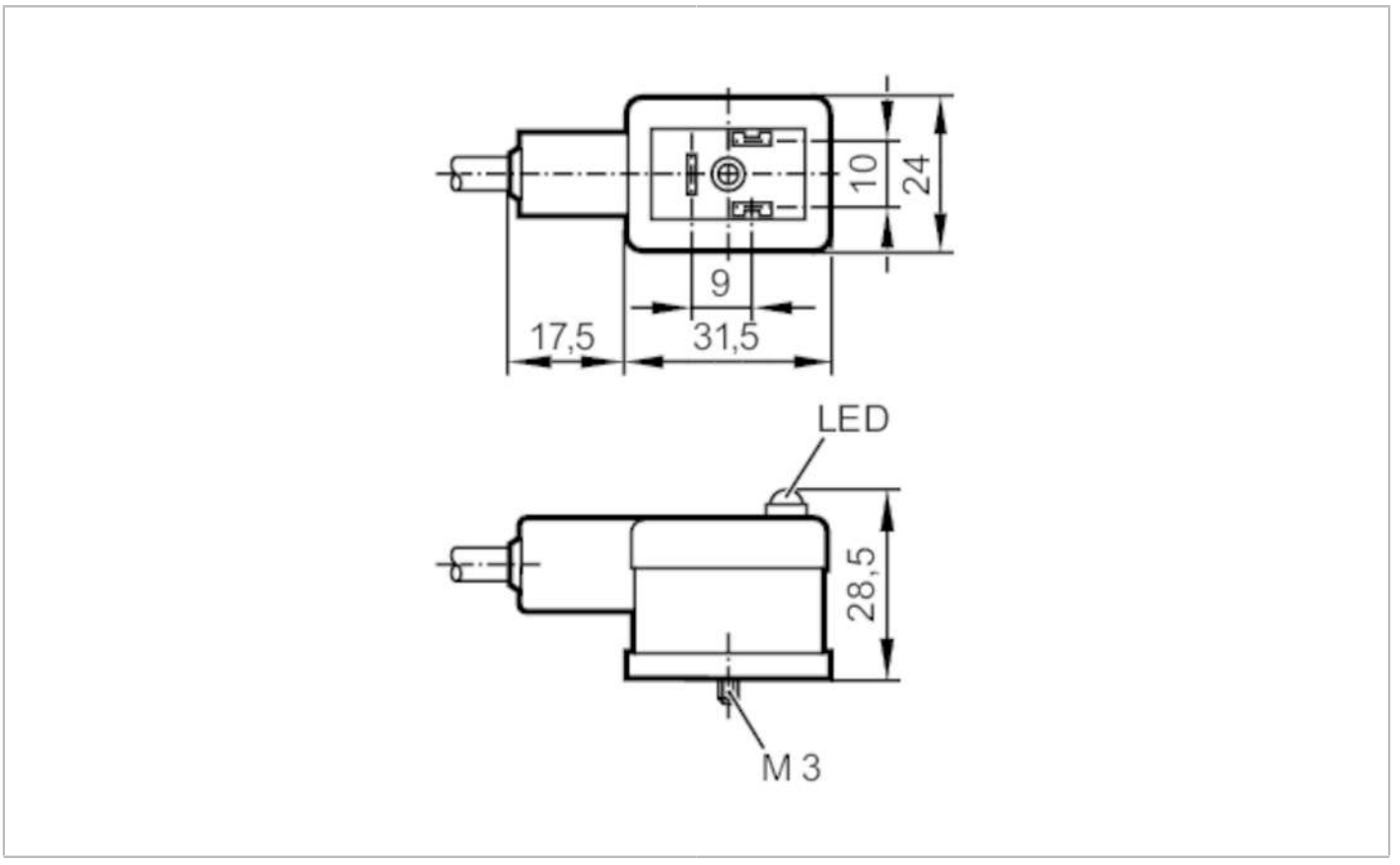

Application			
Special feature		Free from silicone; Halogen-free	
Free from silicone		yes	
Electrical data			
Operating voltage	[V]	< 24 AC/DC	
Overvoltage protection		yes; (VDR)	
Operating conditions			
Ambient temperature	[°C]	-20...80	
Protection		IP 67	
Mechanical data			
Weight	[g]	490	
Dimensions	[mm]	28.5 x 24 x 49	
Materials		PP; FKM	
Moulded-body material		PP / FPM	
Material nut		brass, nickel-plated	
Displays / operating elements			
Display		switching status	1 x LED, yellow
Remarks			
Pack quantity		1 pcs.	

E11992

Jumper cable with valve plug

AVDAB031PLS0010H03

Electrical connection

Cable: 10 m, PUR, Halogen-free, Ø 6.6 mm; 3 x 0.5 mm² / AWG 20

Electrical connection - socket

Connector: 1 x valve type B DIN, angled; Moulded body: PP / FPM; Locking: brass, nickel-plated



Connection

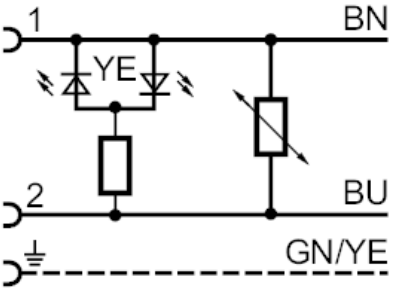

	Core colours :
BN =	brown
BU =	blue
GN/YE =	green/yellow