Brand of NTN corporation

Technical data

BBE60AUU

Standard ball bushings closed



VISUAL (S)

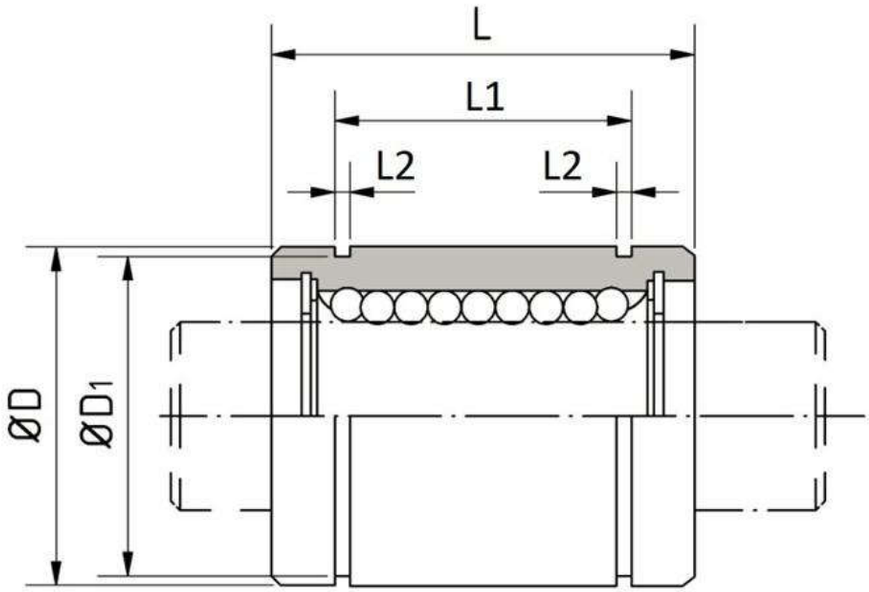

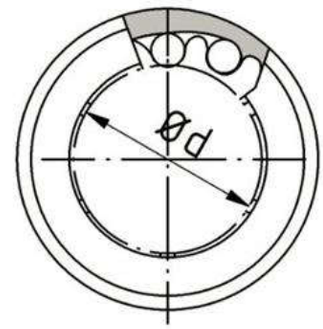

PRODUCT DEFINITION

Brand	SNR
Design type	BBE
Ball bushings category	Standard ball bushings, closed
Standard	ISO dimension
Number of seals	2
Material outer cylinder or steel segments	100Cr6
Material Cage	St15
Initial greasing	Non/No
d - Internal diameter	60 mm

BBE60AUU
Standard ball bushings closed

PRODUCT DEFINITION	
d - Internal diameter tolerance	0,013/-0,002
D - External diameter	90 mm
D - External diameter tolerance	0/-0,015
L - Length	125 mm
L - Length tolerance	0/-0,4
L1	101,7 mm
L1 tolerance	0/-0,4
D1 - Diameter	86,5 mm
L2	3,15 mm
Number of ball rows	6
Mass	2,22 kg

PRODUCT PERFORMANCE	
Cmin	6,086 kN
Cmax	7,79 kN
C0min	9,8 kN
C0max	12,544 kN
Tmin - Min operating temperature	-20 °C
Tmax - Max operating temperature	110 °C

ESHOPDONOTDISPLAY	
Reference	BBE60AUU
Image	BBE+BB_1.JPG, BBE+BB_3.JPG
Send to Eshop	Yes
Send to Paper Catalog	Yes

ESHOPDONOTDISPLAY	
Tracepart	Oui/Yes