Integrated Current Sensor GXN_AND (Version A) Industrial Only

I_{PM} From 10 to 100 A Description

Version A – Industrial Grade Only Description

The GXN_AND Series by LEM is a high-performance, integrated current sensor designed for precise AC and DC current measurement in industrial (version A) and automotive (version Q) environments. Featuring advanced ambient field rejection and a temperature compensation algorithm, the GXN_AND delivers reliable accuracy across a wide temperature range. Its low-resistance primary conductor (0.85 mΩ typical) ensures minimal power loss, supporting efficient system operation.Galvanic isolation between primary and secondary sides eliminates the need for additional insulation, reducing system footprint and cost. The GXN_AND Series supports current measurement from 10 to 100 A, with robust insulation and surge protection for demanding applications.

Note on Version Q – Automotive Grade

The Version Q of the GXN AND Series will be dedicated to automotive applications, with AEC-Q100 qualification and specifications tailored to meet automotive sector requirements.

Key Features & Advantages

- Industry Grade Qualified (version A)
- Wide Current Range: Open-loop, multi-range sensing from 10 to 100 A
- Low Power Loss: Primary resistance of just 0.85 mΩ
- Flexible Supply Voltage: Dual options — 5 V or 3.3 V
- Fast Response: 2.2 µs typical response time; 240 kHz bandwidth
- Overcurrent Detection: Integrated fault output for system protection
- High Isolation: 8 mm clearance and creepage; 5000 V RMS test voltage (UL62638)
- High Surge Capability: Up to 13 kA surge current
- Robust Package: Wide-body SOIC16 for enhanced isolation and reliability
- RoHS Compliant.

Applications

- Servo and Drive
- UPS
- HVAC Inverters
- Appliances
- DCDC
- Power distribution
- Solar Inverters.

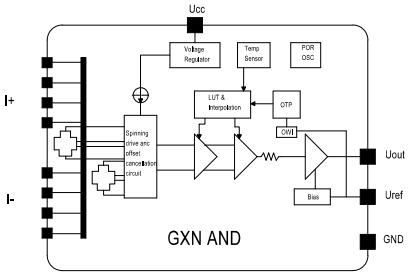

Product MOQ

GXN-XXX: 1000pcs/Reel.



LEM International SA
Route du Nant-d'Avril, 152
1217 Meyrin
www.lem.com

Main Order Information (Recommended the following device)

Part number	Full Scale Primary Current (A)	Nominal current (A)	Power Supply (V)	Sensitivity (mV/A)	Package
GXN AND 20-8 30111A	20	8	3.3	66	SOIC 16L
GXN AND 20-8 50111A	20	8	5	100	
GXN AND 20-8 50011A	20	8	5	100	
GXN AND 25-10 30011A	25	10	3.3	52.8	
GXN AND 30-12 50111A	30	12	5	66.67	
GXN AND 30-12 30111A	30	12	3.3	44	
GXN AND 30-12 30011A	30	12	3.3	44	
GXN AND 30-12 51111A	30	12	5	133.33	
GXN AND 30-12 50011A	30	12	5	66.67	
GXN AND 40-16 30111A	40	16	3.3	33	
GXN AND 40-16 50011A	40	16	5	50	
GXN AND 50-20 50111A	50	20	5	40	
GXN AND 50-20 50011A	50	20	5	40	
GXN AND 50-20 51111A	50	20	5	80	
GXN AND 66-26 50011A	66	26	5	30.77	
GXN AND 66-26 50111A	66	26	5	30.77	
GXN AND 66-26 30011A	66	26	3.3	20.3	
GXN AND 66-26 30111A	66	26	3.3	20.3	
GXN AND 80-32 50011A	80	32	5	25	
GXN AND 100-40 50011A	100	40	5	20	
GXN AND 100-40 50111A	100	40	5	20	

For more information about LEM stock and lead time please contact us.

https://www.lem.com/en/form/contact-us?utm_source=lem&utm_medium=datasheet&utm_campaign=ds_…

Product Naming Rules

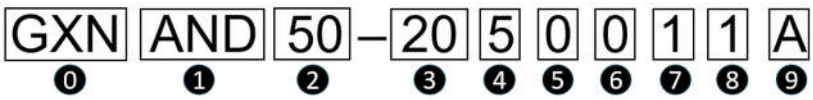

0 Integrated Current Sensor

1 ASIC Version

2 Full Scale Current (A)

3 Nominal Current (A)

4 Supply Voltage:
5 – VCC = 5 V; 3 – VCC = 3.3 V

5 Output Directionality:
0 – Bipolar output ; 1 – Unipolar output

6 Output mode:
0 – Fixed mode output; 1 – Ratiometric mode output

7 Trimming code

8 Operating Temperature Range:
0:-40~150 ℃; 1:-40~125 ℃

9 Product Version

LEM International SA
Route du Nant-d'Avril, 152
1217 Meyrin
www.lem.com

Pin Definitions

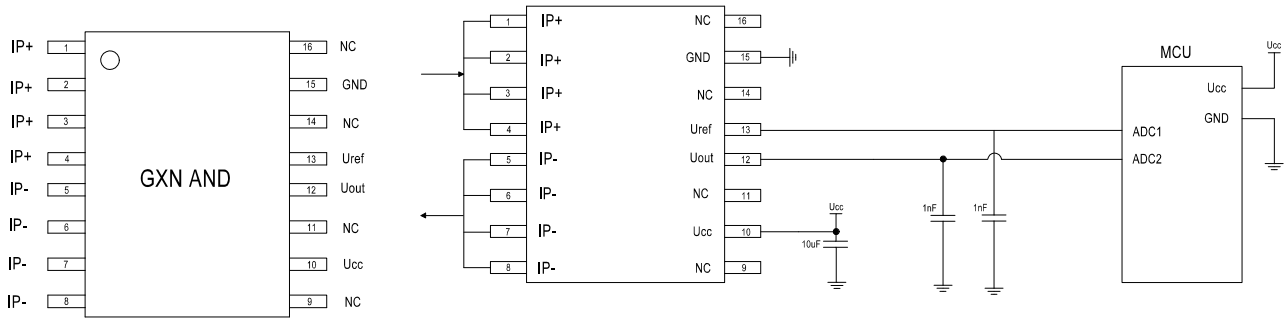

Figure 1: Pin definitions and Fixed output application circuit

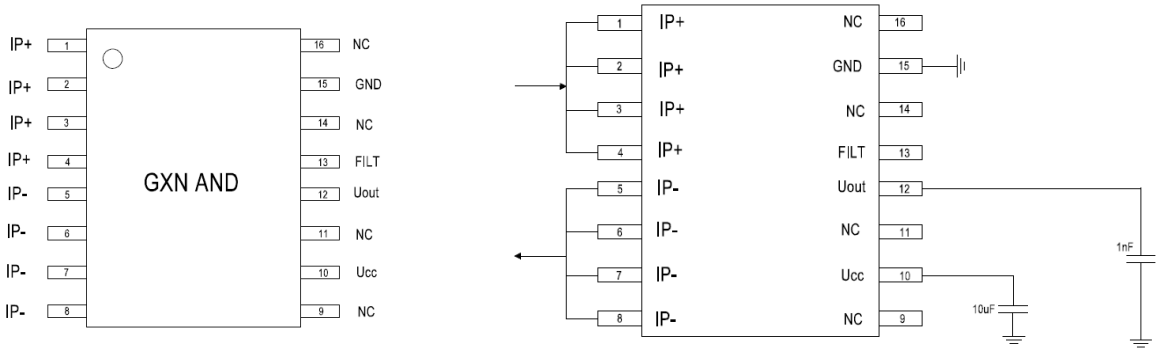

Figure 2: Pin definitions and Ratiometric output application circuit

Pins number	Name	Function
1-4	I_P+	Input of the primary current
5-8	I_P−	Output of the primary current
9	NC	Not Connected
10	U_C	Supply voltage
11	NC	Not Connected
12	U_{out}	Output voltage
13	U_{ref} / FILT	Reference voltage/Filter Pin, decrease bandwidth to limit noise (construct a low-pass filter with internal 4.7K resistor)
14	NC	Not connected
15	GND	Ground
16	NC	Not connected

LEM International SA
Route du Nant-d'Avril, 152
1217 Meyrin
www.lem.com

Absolute maximum ratings

Parameter	Symbol	Unit	Value
Maximum supply voltage @ 25 °C	$U_{C\ max}$	V	6.5
Maximum junction temperature [1)]	$T_{J\ max}$	°C	150
Electrostatic discharge voltage (HBM - Human Body Model)	$U_{ESD\ HBM}$	kV	8
Electrostatic discharge voltage (CDM - Charged Device Model)	$U_{ESD\ CDM}$	kV	2
Source sink max current		mA	±25

Note: Absolute maximum ratings apply at 25 °C unless otherwise noted.

Stresses above these ratings may cause permanent damage.

Exposure to absolute maximum ratings for extended periods may degrade reliability.

Environmental and mechanical characteristics

Parameter	Symbol	Unit	Min	Typ	Max	Comment
Ambient operating temperature	T_A	°C	−40		125	
Ambient storage temperature	$T_{A\ st}$	°C	−40		150	
Resistance of the primary @ T_A = 25 °C	R_P	mΩ		0.85		

Insulation coordination

Parameter	Symbol	Unit	Value	Comment
RMS voltage for AC insulation test, 50 Hz, 1 min	U_d	Vrms	5000	According to IEC 62368-1
Impulse withstand voltage 1.2/50 µs	U_{Surge}	kV	10	According to IEC 61000-4-5
Surge current	I_{Surge}	kA	13	According to IEC61000-4-5
Clearance (pri. - sec.)	d_{Cl}	mm	8	Shortest distance through air
Creepage distance (pri. - sec.)	d_{CP}	mm	8	Shortest path along device body
Case material	-	-	/	
Comparative tracking index	CTI	V/ns	>=600	CTI I
Common-mode transient immunity	$CMTI$	V/ns	>100	The criterion for judging the failure is that the output peak is greater than 100 mV and the duration is longer than 1 us
Application example System voltage RMS		Vrms	1131	Basic insulation according to IEC 62368-1
Application example System voltage DC		Vdc	1600	Basic insulation according to IEC 62368-1

Note: [1)] Done on LEM evaluation board PCB.

LEM International SA
Route du Nant-d'Avril, 152
1217 Meyrin
www.lem.com

GXN_AND Common Characteries (T_A = −40 °C ... 125 °C, U_C = 5 V or 3.3 V, unless otherwise noted)

Parameter	Symbol	Unit	Min	Typ	Max	Comment
DC supply voltage	U_C	V	3	3.3	3.6	U_C = 3.3 V
			4.5	5	5.5	U_C = 5 V
DC current consumption	I_C	mA		12	15	No load, U_C = 5 V
Internal reference voltage @ I_P = 0 A	$U_{I\,ref}$	V	2.49	2.5	2.51	U_C = 5 V, Bipolar&Fixed version
			1.64	1.65	1.66	U_C = 3.3 V, Bipolar&Fixed version
			0.49	0.5	0.51	U_C = 5 V, Unipolar&Fixed version
			0.32	0.33	0.34	U_C = 3.3 V, Unipolar&Fixed version
Output current		mA		1		
Load capacitance [1)]	C_L	nF			10	
Load resistance [1)]	R_L	kΩ	10			
Primary conductor resistance	R_P	mΩ		0.85		T_A = 25 °C
Internal output series resistance		Ohm		5		
Power On Time	t_{PO}	ms		1		T_A = 25 °C, C_L = 1 nF, U_C = 5 V
Linearity error 0 ... ± I_{PM}	ε_L	%	/	±0.2	/	Linearity error 0 ... ± I_{PM}
Output voltage range @ I_{PM}	U_{out}−U_{ref}	V	0.1		U_C − 0.1	T_A = 25 °C, C_L = 1 nF, R_L = 10 kΩ, to U_C or GND
Frequency bandwidth (−3 dB)	BW	kHz		240		T_A = 25 °C, U_C = 5 V
Noise density	N_d	uArms/√Hz		260		T_A = 25 °C, U_C = 5 V
Delay time @ 10 % of the final output value I_{PN} step	$t_{D\,10}$	µs		1.2		T_A = 25 °C, C_L = 1 nF, U_C = 5 V
Delay time @ 90 % of the final output value I_{PN} step	$t_{D\,90}$	µs		2.2		T_A = 25 °C, C_L = 1 nF, U_C = 5 V

Note: [1)] Guaranteed by design.

LEM International SA
Route du Nant-d'Avril, 152
1217 Meyrin
www.lem.com

Electrical data GXN AND 20-8 50011A, (At T_A = −40 °C ... 125 °C, U_C = 5 V , unless otherwise noted)

Parameter	Symbol	Unit	Min	Typ	Max	Comment
Primary nominal current	I_{PN}	A		4		
Primary current, measuring range	I_{PM}	A	−10		10	
Internal reference voltage @ I_P = 0 A	$U_{I\,ref}$	V		1.65		
Nominal sensitivity	S_N	mV/A		100		
Sensitivity error	ε_S	%	−2		2	T_A = 25 °C ... 125 °C
				±3.5		T_A = −40 °C ... 25 °C
Sum of sensitivity and linearity error @ T_A = 25 °C	$\varepsilon_{SL\,25}$	% of I_{PN}	/	2	/	
Electrical offset voltage referred to primary	U_{OE}	mV	−10		10	$U_{out}-U_{I\,ref}$ @ $U_{I\,ref}$ = 2.5 V T_A = 25 °C ... 125 °C
				±10		$U_{out}-U_{I\,ref}$ @ $U_{I\,ref}$ = 2.5 V T_A = −40 °C ... 25 °C
Electrical offset current referred to primary	I_{OE}	mA	−100		100	
Total output error [1]	E_{total}	% of I_{PN}	−2		2	T_A = 25 °C ... 150 °C
				±3.5		T_A = −40 °C ... 25 °C
Total output error over lifetime drift	E_{total_drift}	%		±2 %		T_A = 25 °C

Electrical data GXN AND 20-8 30111A, (At T_A = −40 °C ... 125 °C, U_C = 3.3 V , unless otherwise noted)

Parameter	Symbol	Unit	Min	Typ	Max	Comment
Primary nominal current	I_{PN}	A		8		
Primary current, measuring range	I_{PM}	A	−20		20	
Internal reference voltage @ I_P = 0 A	$U_{I\,ref}$	V		U_C/2		
Nominal sensitivity	S_N	mV/A		66		
Sensitivity error	ε_S	%	−1.5		1.5	T_A = 25 °C ... 125 °C
				±2.5		T_A = −40 °C ... 25 °C
Sum of sensitivity and linearity error @ T_A = 25 °C	$\varepsilon_{SL\,25}$	% of I_{PN}	/	2	/	
Electrical offset voltage referred to primary	U_{OE}	mV	−10		10	$U_{out}-U_{I\,ref}$ @ $U_{I\,ref}$ = 1.65 V T_A = 25 °C ... 125 °C
				±10		$U_{out}-U_{I\,ref}$ @ $U_{I\,ref}$ = 1.65 V T_A = −40 °C ... 25 °C
Electrical offset current referred to primary	I_{OE}	mA	−151.52		151.52	
Total output error [1]	E_{total}	% of I_{PN}	−2		2	T_A = 25 °C ... 150 °C
				±3.5		T_A = −40 °C ... 25 °C
Total output error over lifetime drift	E_{total_drift}	%		±2 %		T_A = 25 °C

Note: [1] In production, total output error and sensitivity error are measured and calculated at 30 A.

LEM International SA
Route du Nant-d'Avril, 152
1217 Meyrin
www.lem.com

Electrical data GXN AND 20-8 50111A, (At T_A = −40 °C ... 125 °C, U_C = 5 V , unless otherwise noted)

Parameter	Symbol	Unit	Min	Typ	Max	Comment
Primary nominal current	I_{PN}	A		8		
Primary current, measuring range	I_{PM}	A	−20		20	
Internal reference voltage @ I_P = 0 A	$U_{I\,ref}$	V		U_C/2		
Nominal sensitivity	S_N	mV/A		100		
Sensitivity error	ε_S	%	−1.5		1.5	T_A = 25 °C ... 125 °C
				±2.5		T_A = −40 °C ... 25 °C
Sum of sensitivity and linearity error @ T_A = 25 °C	ε_{SL25}	% of I_{PN}	/	2	/	
Electrical offset voltage referred to primary	U_{OE}	mV	−10		10	$U_{out}-U_{I\,ref}$ @ $U_{I\,ref}$ = 2.5 V T_A = 25 °C ... 125 °C
				±10		$U_{out}-U_{I\,ref}$ @ $U_{I\,ref}$ = 2.5 V T_A = −40 °C ... 25 °C
Electrical offset current referred to primary	I_{OE}	mA	−10		10	
Total output error [1)]	E_{total}	% of I_{PN}	−2		2	T_A = 25 °C ... 150 °C
				±3.5		T_A = −40 °C ... 25 °C
Total output error over lifetime drift	E_{total_drift}	%		±2 %		T_A = 25 °C

Note: [1)] In production, total output error and sensitivity error are measured and calculated at 30 A.

LEM International SA
Route du Nant-d'Avril, 152
1217 Meyrin
www.lem.com

Electrical data GXN AND 30-12 50011A, (At T_A = −40 °C ... 125 °C, U_C = 5 V , unless otherwise noted)

Parameter	Symbol	Unit	Min	Typ	Max	Comment
Primary nominal current	I_{PN}	A		12		
Primary current, measuring range	I_{PM}	A	−30		30	
Internal reference voltage @ I_P = 0 A	$U_{I\,ref}$	V		2.5		
Nominal sensitivity	S_N	mV/A		66.67		
Sensitivity error	ε_S	%	−2		2	T_A = 25 °C ... 125 °C
				±3.5		T_A = −40 °C ... 25 °C
Sum of sensitivity and linearity error @ T_A = 25 °C	$\varepsilon_{SL\,25}$	% of I_{PN}	/	2	/	
Electrical offset voltage referred to primary	U_{OE}	mV	−10		10	$U_{out}-U_{I\,ref}$ @ $U_{I\,ref}$ = 2.5 V T_A = 25 °C ... 125 °C
				±10		$U_{out}-U_{I\,ref}$ @ $U_{I\,ref}$ = 2.5 V T_A = −40 °C ... 25 °C
Electrical offset current referred to primary	I_{OE}	mA	−150		150	
Total output error [1)]	E_{total}	% of I_{PN}	−2		2	T_A = 25 °C ... 150 °C
				±3.5		T_A = −40 °C ... 25 °C
Total output error over lifetime drift	E_{total_drift}	%		±2 %		T_A = 25 °C

Electrical data GXN AND 30-12 50111A, (At T_A = −40 °C ... 125 °C, U_C = 5 V , unless otherwise noted)

Parameter	Symbol	Unit	Min	Typ	Max	Comment
Primary nominal current	I_{PN}	A		12		
Primary current, measuring range	I_{PM}	A	−30		30	
Internal reference voltage @ I_P = 0 A	$U_{I\,ref}$	V		U_C/2		
Nominal sensitivity	S_N	mV/A		66.67		
Sensitivity error	ε_S	%	−2		2	T_A = 25 °C ... 125 °C
				±3.5		T_A = −40 °C ... 25 °C
Sum of sensitivity and linearity error @ T_A = 25 °C	$\varepsilon_{SL\,25}$	% of I_{PN}	/	2	/	
Electrical offset voltage referred to primary	U_{OE}	mV	−10		10	$U_{out}-U_{I\,ref}$ @ $U_{I\,ref}$ = 2.5 V T_A = 25 °C ... 125 °C
				±10		$U_{out}-U_{I\,ref}$ @ $U_{I\,ref}$ = 2.5 V T_A = −40 °C ... 25 °C
Electrical offset current referred to primary	I_{OE}	mA	−150		150	
Total output error [1)]	E_{total}	% of I_{PN}	−2		2	T_A = 25 °C ... 150 °C
				±3.5		T_A = −40 °C ... 25 °C
Total output error over lifetime drift	E_{total_drift}	%		±2 %		T_A = 25 °C

Note: [1)] In production, total output error and sensitivity error are measured and calculated at 30 A.

LEM International SA
Route du Nant-d'Avril, 152
1217 Meyrin
www.lem.com

Electrical data GXN AND 30-12 30011A, (At T_A = −40 °C ... 125 °C, U_C = 3.3 V , unless otherwise noted)

Parameter	Symbol	Unit	Min	Typ	Max	Comment
Primary nominal current	I_{PN}	A		12		
Primary current, measuring range	I_{PM}	A	−30		30	
Internal reference voltage @ I_P = 0 A	$U_{I\,ref}$	V		1.65		
Nominal sensitivity	S_N	mV/A		44		
Sensitivity error	ε_S	%	−2		2	T_A = 25 °C ... 125 °C
				±3.5		T_A = −40 °C ... 25 °C
Sum of sensitivity and linearity error @ T_A = 25 °C	ε_{SL25}	% of I_{PN}	/	2	/	
Electrical offset voltage referred to primary	U_{OE}	mV	−10		10	$U_{out}-U_{I\,ref}$ @ $U_{I\,ref}$ = 2.5 V T_A = 25 °C ... 125 °C
				±10		$U_{out}-U_{I\,ref}$ @ $U_{I\,ref}$ = 2.5 V T_A = −40 °C ... 25 °C
Electrical offset current referred to primary	I_{OE}	mA	−227.27		227.27	
Total output error [1)]	E_{total}	% of I_{PN}	−2		2	T_A = 25 °C ... 150 °C
				±3.5		T_A = −40 °C ... 25 °C
Total output error over lifetime drift	E_{total_drift}	%		±2 %		T_A = 25 °C

Note: [1)] In production, total output error and sensitivity error are measured and calculated at 30 A.

LEM International SA
Route du Nant-d'Avril, 152
1217 Meyrin
www.lem.com

Electrical data GXN AND 40-16 30111A, (At T_A = −40 °C ... 125 °C, U_C = 3.3 V , unless otherwise noted)

Parameter	Symbol	Unit	Min	Typ	Max	Comment
Primary nominal current	I_{PN}	A		16		
Primary current, measuring range	I_{PM}	A	−40		40	
Internal reference voltage @ I_P = 0 A	$U_{I\,ref}$	V		U_C/2		
Nominal sensitivity	S_N	mV/A		33		
Sensitivity error	ε_S	%	−2		2	T_A = 25 °C ... 125 °C
				±3.5		T_A = −40 °C ... 25 °C
Sum of sensitivity and linearity error @ T_A = 25 °C	$\varepsilon_{SL\,25}$	% of I_{PN}	/	2	/	
Electrical offset voltage referred to primary	U_{OE}	mV	−10		10	$U_{out}-U_{I\,ref}$ @ $U_{I\,ref}$ = 1.65 V T_A = 25 °C ... 125 °C
				±10		$U_{out}-U_{I\,ref}$ @ $U_{I\,ref}$ = 1.65 V T_A = −40 °C ... 25 °C
Electrical offset current referred to primary	I_{OE}	mA	−303.03		303.03	
Total output error [1)]	E_{total}	% of I_{PN}	−2		2	T_A = 25 °C ... 150 °C
				±3.5		T_A = −40 °C ... 25 °C
Total output error over lifetime drift	E_{total_drift}	%		±2 %		T_A = 25 °C

Electrical data GXN AND 40-16 50011A, (At T_A = −40 °C ... 125 °C, U_C = 5 V , unless otherwise noted)

Parameter	Symbol	Unit	Min	Typ	Max	Comment
Primary nominal current	I_{PN}	A		16		
Primary current, measuring range	I_{PM}	A	−40		40	
Internal reference voltage @ I_P = 0 A	$U_{I\,ref}$	V		2.5		
Nominal sensitivity	S_N	mV/A		50		
Sensitivity error	ε_S	%	−2		2	T_A = 25 °C ... 125 °C
				±3.5		T_A = −40 °C ... 25 °C
Sum of sensitivity and linearity error @ T_A = 25 °C	$\varepsilon_{SL\,25}$	% of I_{PN}	/	2	/	
Electrical offset voltage referred to primary	U_{OE}	mV	−10		10	$U_{out}-U_{I\,ref}$ @ $U_{I\,ref}$ = 2.5 V T_A = 25 °C ... 125 °C
				±10		$U_{out}-U_{I\,ref}$ @ $U_{I\,ref}$ = 2.5 V T_A = −40 °C ... 25 °C
Electrical offset current referred to primary	I_{OE}	mA	−200		200	
Total output error [1)]	E_{total}	% of I_{PN}	−2		2	T_A = 25 °C ... 150 °C
				±3.5		T_A = −40 °C ... 25 °C
Total output error over lifetime drift	E_{total_drift}	%		±2 %		T_A = 25 °C

Note: [1)] In production, total output error and sensitivity error are measured and calculated at 30 A.

LEM International SA
Route du Nant-d'Avril, 152
1217 Meyrin
www.lem.com

Electrical data GXN AND 50-20 50111A, (At T_A = −40 °C ... 125 °C, U_C = 5 V , unless otherwise noted)

Parameter	Symbol	Unit	Min	Typ	Max	Comment
Primary nominal current	I_{PN}	A		20		
Primary current, measuring range	I_{PM}	A	−50		50	
Internal reference voltage @ I_P = 0 A	$U_{I\,ref}$	V		U_C/2		
Nominal sensitivity	S_N	mV/A		40		
Sensitivity error	ε_S	%	−2		2	T_A = 25 °C ... 125 °C
				±3.5		T_A = −40 °C ... 25 °C
Sum of sensitivity and linearity error @ T_A = 25 °C	ε_{SL25}	% of I_{PN}	/	2	/	
Electrical offset voltage referred to primary	U_{OE}	mV	−10		10	$U_{out}-U_{I\,ref}$ @ $U_{I\,ref}$ = 2.5 V T_A = 25 °C ... 125 °C
				±10		$U_{out}-U_{I\,ref}$ @ $U_{I\,ref}$ = 2.5 V T_A = −40 °C ... 25 °C
Electrical offset current referred to primary	I_{OE}	mA	−250		250	
Total output error [1)]	E_{total}	% of I_{PN}	−2		2	T_A = 25 °C ... 150 °C
				±3.5		T_A = −40 °C ... 25 °C
Total output error over lifetime drift	E_{total_drift}	%		±2 %		T_A = 25 °C

Electrical data GXN AND 50-20 50011A, (At T_A = −40 °C ... 125 °C, U_C = 5 V , unless otherwise noted)

Parameter	Symbol	Unit	Min	Typ	Max	Comment
Primary nominal current	I_{PN}	A		20		
Primary current, measuring range	I_{PM}	A	−50		50	
Internal reference voltage @ I_P = 0 A	$U_{I\,ref}$	V		2.5		
Nominal sensitivity	S_N	mV/A		40		
Sensitivity error	ε_S	%	−2		2	T_A = 25 °C ... 125 °C
				±3.5		T_A = −40 °C ... 25 °C
Sum of sensitivity and linearity error @ T_A = 25 °C	ε_{SL25}	% of I_{PN}	/	2	/	
Electrical offset voltage referred to primary	U_{OE}	mV	−10		10	$U_{out}-U_{I\,ref}$ @ $U_{I\,ref}$ = 2.5 V T_A = 25 °C ... 125 °C
				±10		$U_{out}-U_{I\,ref}$ @ $U_{I\,ref}$ = 2.5 V T_A = −40 °C ... 25 °C
Electrical offset current referred to primary	I_{OE}	mA	−250		250	
Total output error [1)]	E_{total}	% of I_{PN}	−2		2	T_A = 25 °C ... 150 °C
				±3.5		T_A = −40 °C ... 25 °C
Total output error over lifetime drift	E_{total_drift}	%		±2 %		T_A = 25 °C

Note: [1)] In production, total output error and sensitivity error are measured and calculated at 30 A.

LEM International SA
Route du Nant-d'Avril, 152
1217 Meyrin
www.lem.com

Electrical data GXN AND 80-32 50011A, (At T_A = −40 °C ... 125 °C, U_C = 5 V , unless otherwise noted)

Parameter	Symbol	Unit	Min	Typ	Max	Comment
Primary nominal current	I_{PN}	A		32		
Primary current, measuring range	I_{PM}	A	−80		80	
Internal reference voltage @ I_P = 0 A	$U_{I\,ref}$	V		2.5		
Nominal sensitivity	S_N	mV/A		25		
Sensitivity error	ε_S	%	−2		2	T_A = 25 °C ... 125 °C
				±3.5		T_A = −40 °C ... 25 °C
Sum of sensitivity and linearity error @ T_A = 25 °C	$\varepsilon_{SL\,25}$	% of I_{PN}	/	2	/	
Electrical offset voltage referred to primary	U_{OE}	mV	−10		10	$U_{out}-U_{I\,ref}$ @ $U_{I\,ref}$ = 2.5 V T_A = 25 °C ... 125 °C
				±10		$U_{out}-U_{I\,ref}$ @ $U_{I\,ref}$ = 2.5 V T_A = −40 °C ... 25 °C
Electrical offset current referred to primary	I_{OE}	mA	−400		400	
Total output error [1)]	E_{total}	% of I_{PN}	−2		2	T_A = 25 °C ... 150 °C
				±3.5		T_A = −40 °C ... 25 °C
Total output error over lifetime drift	E_{total_drift}	%		±2 %		T_A = 25 °C

Note: [1)] In production, total output error and sensitivity error are measured and calculated at 30 A.

LEM International SA
Route du Nant-d'Avril, 152
1217 Meyrin
www.lem.com

Electrical data GXN AND 100-40 50011A, (At T_A = −40 °C ... 125 °C, U_C = 5 V , unless otherwise noted)

Parameter	Symbol	Unit	Min	Typ	Max	Comment
Primary nominal current	I_{PN}	A		40		
Primary current, measuring range	I_{PM}	A	−100		100	
Internal reference voltage @ I_P = 0 A	$U_{I\,ref}$	V		2.5		
Nominal sensitivity	S_N	mV/A		20		
Sensitivity error	ε_S	%	−2		2	T_A = 25 °C ... 125 °C
				±3.5		T_A = −40 °C ... 25 °C
Sum of sensitivity and linearity error @ T_A = 25 °C	ε_{SL25}	% of I_{PN}	/	2	/	
Electrical offset voltage referred to primary	U_{OE}	mV	−10		10	$U_{out}-U_{I\,ref}$ @ $U_{I\,ref}$ = 2.5 V T_A = 25 °C ... 125 °C
				±10		$U_{out}-U_{I\,ref}$ @ $U_{I\,ref}$ = 2.5 V T_A = −40 °C ... 25 °C
Electrical offset current referred to primary	I_{OE}	mA	−500		500	
Total output error [1)]	E_{total}	% of I_{PN}	−2		2	T_A = 25 °C ... 150 °C
				±3.5		T_A = −40 °C ... 25 °C
Total output error over lifetime drift	E_{total_drift}	%		±2 %		T_A = 25 °C

Note: [1)] In production, total output error and sensitivity error are measured and calculated at 30 A.

LEM International SA
Route du Nant-d'Avril, 152
1217 Meyrin
www.lem.com

Definition of typical, minimum and maximum values

Minimum and maximum values for specified limiting and safety conditions have to be understood as such as well as values shown in “typical” graphs.
On the other hand, measured values are part of a statistical distribution that can be specified by an interval with upper and lower limits and a probability for measured values to lie within this interval.
Unless otherwise stated (e.g. “100 % tested”), the LEM definition for such intervals designated with “min” and “max” is that the probability for values of samples to lie in this interval is 99.73 %.
For a normal (Gaussian) distribution, this corresponds to an interval between −3 sigma and +3 sigma. If “typical” values are not obviously mean or average values, those values are defined to delimit intervals with a probability of 68.27 %, corresponding to an interval between −sigma and +sigma for a normal distribution.
Typical, maximal and minimal values are determined during the initial characterization of the product.

LEM International SA
Route du Nant-d’Avril, 152
1217 Meyrin
www.lem.com

Performance parameters definition

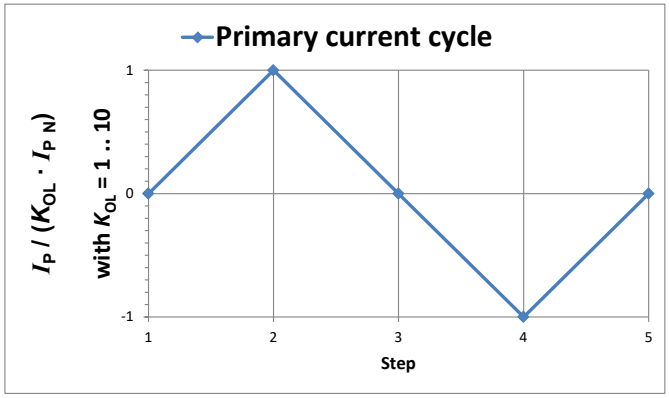

K_{OL}: Overload factor

Figure 1: Current cycle used to measure electrical offset (transducer supplied)

Electrical offset referred to primary

Using the current cycle shown in figure 1, the electrical offset voltage U_{OE} is the residual output referred to primary when the input current is zero.

$$U_{OE} = \frac{U_{P(3)} + U_{P(5)}}{2}$$

The temperature variation U_{OT} of the electrical offset voltage U_{OE} is the variation of the electrical offset from 25 °C to the considered temperature.

$$U_{OT}(T) = U_{OE}(T) - U_{OE}(25\ °C)$$

Delay times

The delay time t_{D10} @ 10 % and the delay time t_{D90} @ 90 % with respect to the primary are shown in the next figure.
Both slightly depend on the primary current di/dt.
They are measured at nominal current.

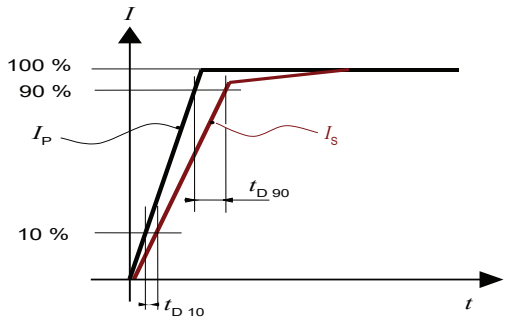

Figure 2: t_{D10} (delay time @ 10 %) and t_{D90} (delay time @ 90 %)

Total error referred to primary

The total error ε_{tot} is the error at $\pm I_{PN}$, relative to the rated value I_{PN}.
It includes all errors mentioned above

- the electrical offset I_{OE}
- the magnetic offset I_{OM}
- the sensitivity error ε_S
- the linearity error ε_L (to I_{PN}).

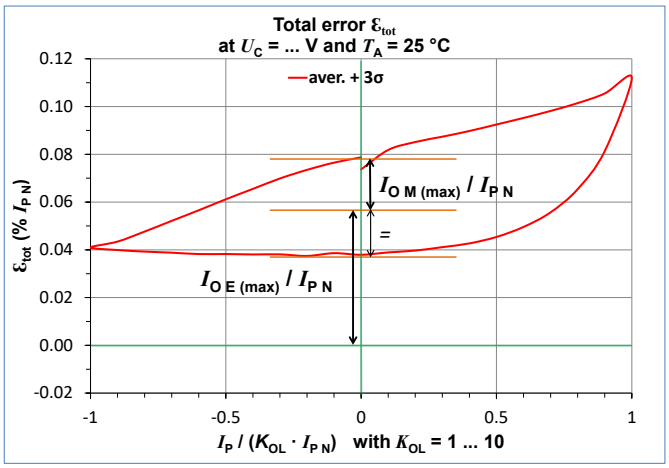

Figure 3: Total error ε_{tot}

LEM International SA
Route du Nant-d'Avril, 152
1217 Meyrin
www.lem.com

Dimensions (in mm)

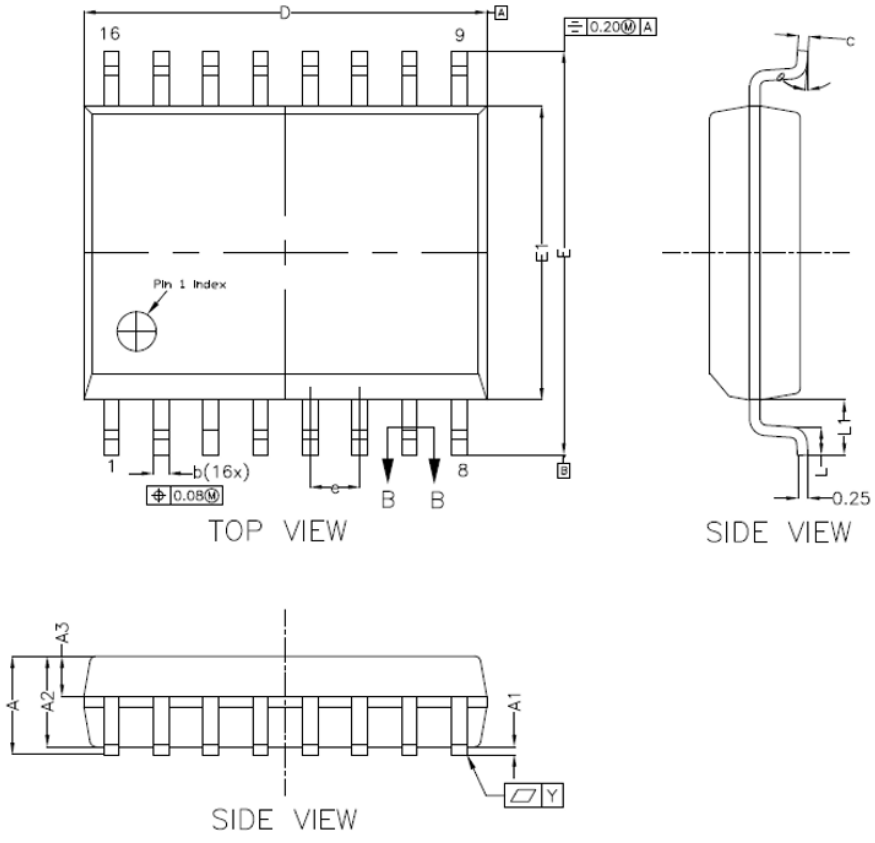

* CONTROLLING DIMENSION : MM

SYMBOL	MILLIMETER		
	MIN.	NOM.	MAX.
A	---	---	2.65
A1	0.10	---	030
A2	2.25	2.30	2.35
A3	0.97	1.02	1.07
b	0.35	---	0.43
c	0.23	---	0.32
D	10.20	10.30	10.40
E	10.10	10.30	10.50
E1	7.40	7.50	7.60
e	1.27 bsc		
L1	1.40 bsc		
L	0.55	---	0.85
Y	---	0.10	---
θ	0°	---	8°

NOTES

1.0 COPLANARITY APPLIES TO LEADS, CORNER LEADS AND DIE ATTACH PAD.

LEM International SA
Route du Nant-d'Avril, 152
1217 Meyrin
www.lem.com

Tape and Reel (in mm)

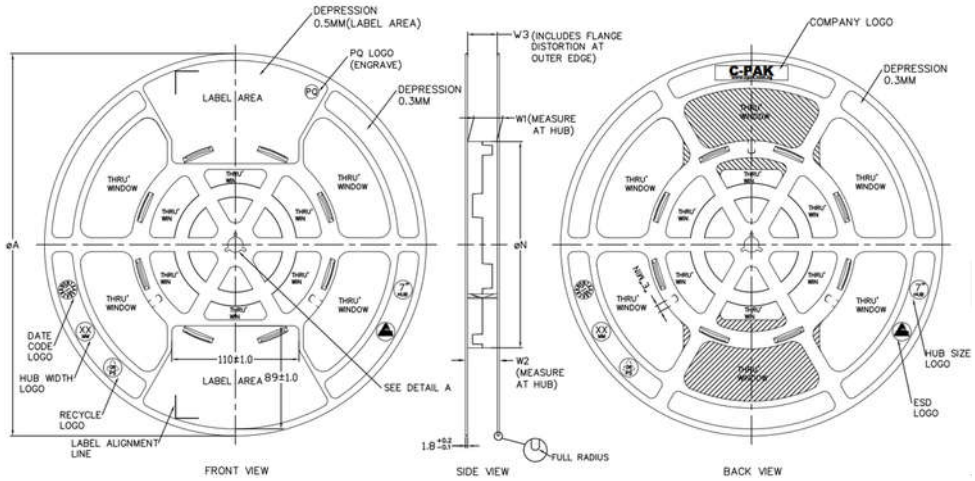

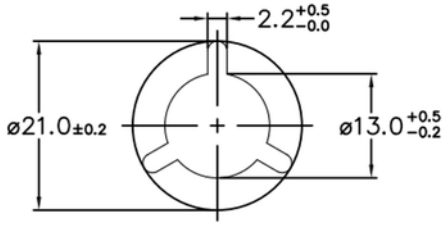

ARBOR HOLE
DETAIL A
SCALE : 3:1

PRODUCT SPECIFICATION						
TAPE WIDTH	øA ±2.0	øN ±2.0	W1	W2 (MAX)	W3	E (MIN)
08MM	330	178	8.4 +1.5 -0.0	14.4	SHALL ACCOMMODATE TAPE WIDTH WITHOUT INTERFERENCE	5.5
12MM	330	178	12.4 +2.0 -0.0	18.4		5.5
16MM	330	178	16.4 +2.0 -0.0	22.4		5.5
24MM	330	178	24.4 +2.0 -0.0	30.4		5.5
32MM	330	178	32.4 +2.0 -0.0	38.4		5.5

SURFACE RESISTIVITY			
LEGEND	SR RANGE	TYPE	COLOUR
A	BELOW 10^{12}	ANTISTATIC	ALL TYPES
B	10^{9} TO 10^{11}	STATIC DISSIPATIVE	BLACK ONLY
C	10^{5} & BELOW 10^{5}	CONDUCTIVE (GENERIC)	BLACK ONLY
E	10^{9} TO 10^{11}	ANTISTATIC (COATED)	ALL TYPES

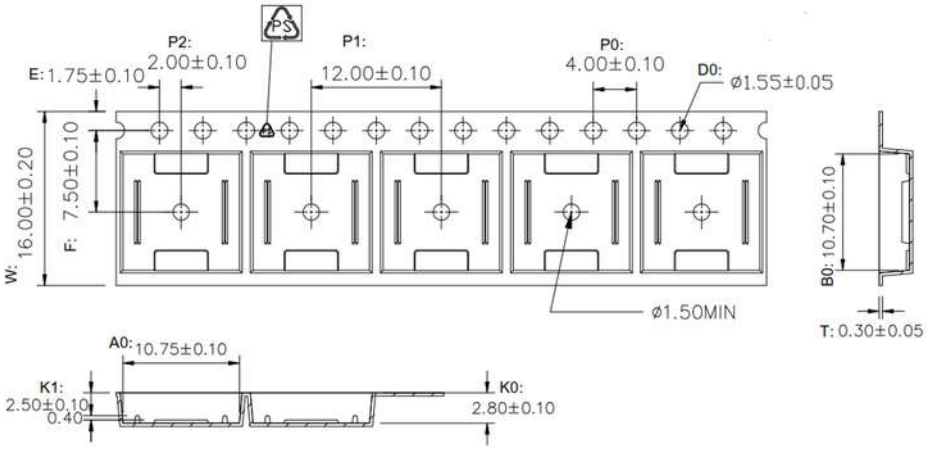

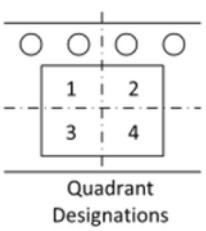

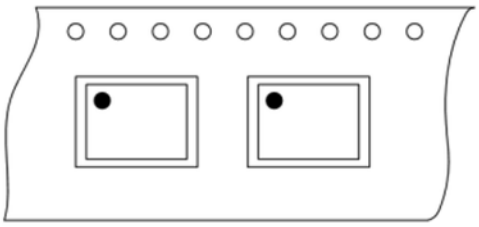

LEM International SA
Route du Nant-d'Avril, 152
1217 Meyrin
www.lem.com

Safety



Caution

If the device is used in a way that is not specified by the manufacturer, the protection provided by the device may be compromised.
Always inspect the electronics unit and connecting cable before using this product and do not use it if damaged.
Mounting assembly shall guarantee the maximum primary conductor temperature, fulfill clearance and creepage distance, minimize electric and magnetic coupling, and unless otherwise specified can be mounted in any orientation.



Caution, risk of electrical shock

This transducer must be used in limited-energy secondary circuits SELV according to IEC 61010-1, in electric/electronic equipment with respect to applicable standards and safety requirements in accordance with the manufacturer's operating specifications.

Use caution during installation and use of this product; certain parts of the module can carry hazardous voltages and high currents (e.g. power supply, primary conductor).
Ignoring this warning can lead to injury and or/or cause serious damage.

This transducer is a build-in device, whose hazardous live parts must be inaccessible after installation.
This transducer must be mounted in a suitable end-enclosure.
Besides make sure to have a distance of minimum 30 mm between the primary terminals of the transducer and other neighboring components.

This transducer is a built-in device, not intended to be cleaned with any product. Nevertheless if the user must implement cleaning or washing process, validation of the cleaning program has to be done by himself.



ESD susceptibility
The product is susceptible to be damaged from an ESD event and the personnel should be grounded when handling it.

Do not dispose of this product as unsorted municipal waste. Contact a qualified recycler for disposal.
Although LEM applies utmost care to facilitate compliance of end products with applicable regulations during LEM product design, use of this part may need additional measures on the application side for compliance with regulations regarding EMC and protection against electric shock. Therefore LEM cannot be held liable for any potential hazards, damages, injuries or loss of life resulting from the use of this product.



Underwriters Laboratory Inc. recognized component

IMPORTANT NOTICE

The information in this document is considered accurate and reliable. However, LEM International SA and any company directly or indirectly controlled by LEM Holding SA (“LEM”) do not provide any guarantee or warranty, expressed or implied, regarding the accuracy or completeness of this information and are not liable for any consequences resulting from its use. LEM shall not be responsible for any indirect, incidental, punitive, special, or consequential damages (including, but not limited to, lost profits, lost savings, business interruption, costs related to the removal or replacement of products, or rework charges) regardless of whether such damages arise from tort (including negligence), warranty, breach of contract, or any other legal theory.

LEM reserves the right to update the information in this document, including specifications and product descriptions, at any time without prior notice. Information in this document replaces any previous versions of this document. No license to any intellectual property is granted by LEM through this document, either explicitly or implicitly. Any Information and product described herein is subject to export control regulations.

LEM products may possess either unidentified or documented vulnerabilities. It is the sole responsibility of the purchaser to design and operate their applications and products in a manner that mitigates the impact of these vulnerabilities. LEM disclaims any liability for such vulnerabilities. Customers must select products with security features that best comply with applicable rules, regulations, and standards for their intended use. The purchaser is responsible for making final design decisions regarding its products and for ensuring compliance with all legal, regulatory, and security-related requirements, irrespective of any information or support provided by LEM.

LEM products are not intended, authorized, or warranted for use in life support, life-critical, or safety-critical systems or equipment, nor in applications where failure or malfunction of an LEM product could result in personal injury, death, or significant property or environmental damage. LEM and its suppliers do not assume liability for the inclusion and/or use of LEM products in such equipment or applications; thus, this inclusion and/or use is at the purchaser’s own and sole risk. Unless explicitly stated that a specific LEM product is automotive qualified, it should not be used in automotive applications. LEM does not accept liability for the inclusion and/or use of non-automotive qualified products in automotive equipment or applications.

Applications that are described herein are for illustrative purposes only. LEM makes no representation or warranty that LEM products will be suitable for a particular purpose, a specified use or application. The purchaser is solely responsible for the design and operation of its applications and devices using LEM products, and LEM accepts no liability for any assistance with any application or purchaser product design. It is purchaser’s sole responsibility to determine whether the LEM product is suitable and fit for the purchaser’s applications and products planned, as well as for the planned application and use of purchaser’s third-party customer(s).

Stressing and using LEM products at or above limiting values will cause permanent damage to the LEM product and potentially to any device embedding or operating with LEM product. Limiting values are stress ratings only and operation of the LEM product at or above conditions and limits given in this document is not warranted. Continuous or repeated exposure to limiting values will permanently and irreversibly affect the quality and reliability of the LEM product.

LEM products are sold subject to the general terms and conditions of commercial sale, as published at www.lem.com unless otherwise agreed in a specific written agreement. LEM hereby expressly rejects the purchaser’s general terms and conditions for purchasing LEM products by purchaser. Any terms and conditions contained in any document issued by the purchaser either before or after issuance of any document by LEM containing or referring to the general terms and conditions of sale are explicitly rejected and disregarded by LEM, and the document issued by the purchaser is wholly inapplicable to any sale or licensing made by LEM and is not binding in any way on LEM.

© 2025 LEM INTERNATIONAL SA – All rights reserved

LEM International SA
Route du Nant-d’Avril, 152
1217 Meyrin
www.lem.com