HI9813-51 & HI9813-61

# Portable pH / EC / TDS / Temperature Meters




INSTRUCTION MANUAL

HANNA instruments

Dear Customer,

Thank you for choosing a Hanna Instruments® product. Please read this instruction manual carefully before using this instrument. This manual will provide you with the necessary information for correct use of this instrument, as well as a precise idea of its versatility.

If you need additional technical information, do not hesitate to e-mail us at tech@hannainst.com or view our contact list at www.hannainst.com.

*All rights are reserved.*

*Reproduction in whole or in part is prohibited without the written consent of the copyright owner, Hanna Instruments Inc., Woonsocket, Rhode Island, 02895, USA.*

# TABLE OF CONTENTS


1. Preliminary Examination ..... 4
2. General Description ..... 4
3. Functional Description & LCD Display ..... 5
4. Specifications ..... 7
5. General Operations ..... 9
    5.1. Battery Replacement ..... 9
    5.2. Connecting the Electrode ..... 9
    5.3. Turning the Meter On ..... 9
    5.4. Sensor Preparation & Conditioning ..... 9
6. Calibration ..... 10
    6.1. pH ..... 10
    6.2. EC/TDS ..... 11
7. Measurement ..... 12
    7.1. pH ..... 12
    7.2. EC/TDS ..... 12
    7.3. Temperature ..... 13
    7.4. Warnings ..... 13
8. pH Values at Various Temperatures ..... 14
9. Probe Maintenance ..... 15
10. Accessories ..... 17

Certification ..... 18

Recommendations for Users ..... 18

Warranty ..... 18

## 1. PRELIMINARY EXAMINATION

Remove the instrument and accessories from the packaging and examine it carefully. For further assistance, please contact your local Hanna Instruments® office or email us at tech@hannainst.com.

Each instrument is delivered in a rugged carrying case and supplied with:

- HI1285-51 pH/EC/TDS/Temperature combination probe with DIN connector with 1 m (3.3') cable (HI9813-51)
- HI1285-61 pH/EC/TDS/Temperature combination probe with CAL Check™ and DIN connector with 1 m (3.3') cable (HI9813-61)
- pH 7.01 buffer solution (1 sachet)
- 1413 µS/cm conductivity solution (1 sachet)
- 1500 ppm TDS calibration solution (1 sachet)
- General purpose cleaning solution for Agriculture (2 sachets)
- Calibration check solution (2 sachets) (HI9813-61)
- 100 mL plastic beaker (1 pc.)
- 9V Alkaline battery (1 pc.)
- Instrument quality certificate
- Instruction manual

***Note:*** *Save all packing material until you are sure that the instrument works correctly. Any damaged or defective item must be returned in its original packing material with the supplied accessories.*

## 2. GENERAL DESCRIPTION

HI9813-51 and HI9813-61 are portable, water resistant meters, designed for measuring pH, EC/TDS, and temperature when paired with their respective probes, i.e. HI9813-51 with HI1285-51 and HI9813-61 with HI1285-61.

The meters are easy to use, with dedicated keys for measurement modes that are clearly displayed on the LCD, and knobs for 1-point calibration of pH and EC. On-screen tutorial messages guide the user through calibration and measurement.

### Main Features

- 3-in-1 combination probe with pH, EC/TDS, and temperature sensors
- CAL Check™ (HI9813-61 only)
- Best for hydroponics, greenhouses, farming, and ground water app.

### Probe features

The polypropylene (PP) body houses three sensors:

**pre-amplified pH electrode:** Cloth junction, Polymer-gel electrolyte, Low temperature (LT) glass-sensing bulb

**amperometric EC/TDS sensor:** Two stainless-steel prongs for determination of conductivity and total dissolved solids

**NTC Thermistor (built-in):** Ensures that readings are compensated for temperature variations

## 3. FUNCTIONAL DESCRIPTION & LCD DISPLAY

### HI9813-51

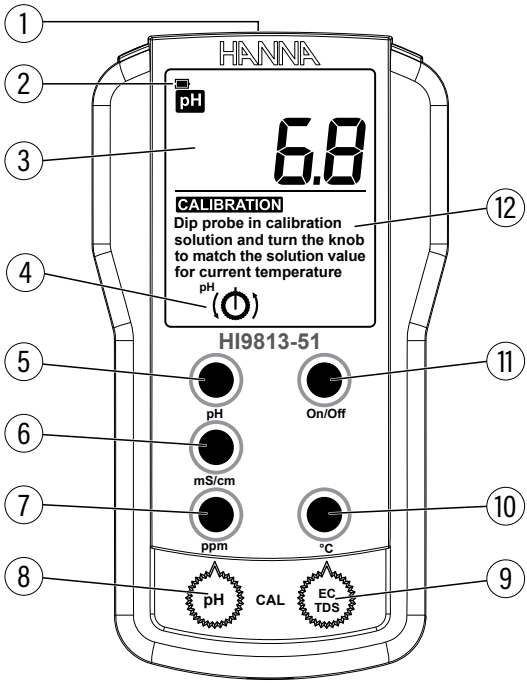


1. 8-pin DIN connector socket
2. Battery-level indicator
3. LCD display
4. On-screen calibration knob indicator
5. **pH** key – pH range selection
6. **mS/cm** key – EC range selection
7. **ppm** (mg/L) key – TDS selection
8. pH calibration knob
9. EC/TDS calibration knob
10. Temperature (**°C**) selection key
11. On/Off key
12. On-screen tutorial messages

## HI9813-61

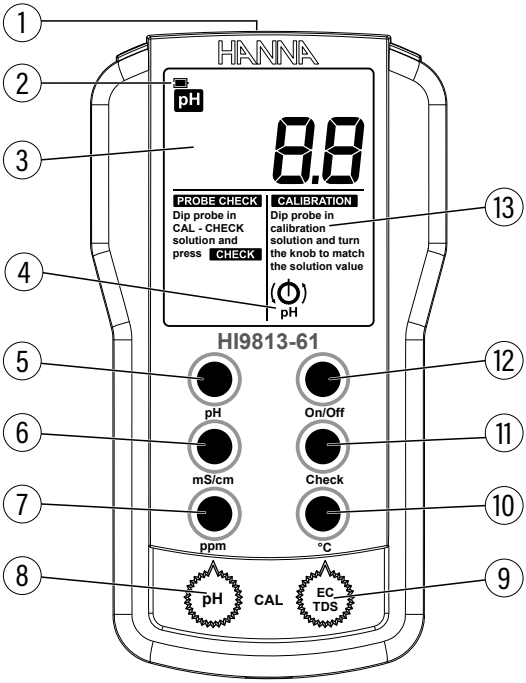


1. 8-pin DIN connector socket
2. Battery-level indicator
3. LCD display
4. On-screen calibration knob indicator
5. **pH** key – pH range selection
6. **mS/cm** key – EC range selection
7. **ppm** (mg/L) key – TDS selection
8. pH calibration knob
9. EC/TDS calibration knob
10. Temperature (**°C**) selection key
11. CAL Check key
12. On/Off key
13. On-screen tutorial messages

# 4. SPECIFICATIONS

## Meter

| | |
|---|---|
| **pH** | |
| Range* | 0.0 to 14.0 pH |
| Resolution | 0.1 pH |
| Accuracy | ±0.1 pH (@ 25 °C / 77 °F) |
| Calibration | Manual, 1-point |
| **EC** | |
| Range* | 0.00 to 4.00 mS/cm |
| Resolution | 0.01 mS/cm |
| Accuracy | ±2% f.s. mS/cm (@ 25 °C / 77 °F) |
| Calibration | Manual, 1-point |
| Temp. compensation | Automatic from 0 to 70 °C with ß=2% / °C |
| **TDS** | |
| Range* | 0 to 1999 ppm |
| Resolution | 1 ppm |
| Accuracy | ±2% f.s. ppm (@ 25 °C / 77 °F) |
| Calibration | Manual, 1-point |
| Temp. compensation | Automatic from 0 to 70 °C with ß=2% / °C |
| Conversion factor | Variable, automatically adjusted from 0.56 to 0.78 based on actual EC readings (based on 442 curve for natural water) |
| **Temperature** | |
| Range* | 0.0 to 70.0 °C |
| Resolution | 0.1 °C |
| Accuracy | ±0.5 °C |
| Probe (included) | HI1285-51 for HI9813-51<br>HI1285-61 for HI9813-61 |
| Battery life | Approximately 150 hours of continuous use |
| Auto shut-off | After 8 minutes of non-use |
| Battery type | 1 x 9V Alkaline |
| Environment | 0 to 50 °C (32 to 122 °F); 100% RH |
| Dimensions | 145 x 80 x 36 mm (5.7 x 3.1 x 1.4 ") |
| Weight | 230 g (8.1 oz.) |

* The range may be limited by the probe's limits.

## Probe

| | |
|---|---|
| Reference | Single, Ag/AgCl |
| Junction | Cloth |
| Electrolyte | Gel |
| Max. Pressure | 0.1 bar |
| Range | pH: 0 to 13<br>EC: 0 to 6 mS/cm<br>Temperature: 0 to 50°C (32 to 122°F) |
| Tip Shape | Spheric, Ø 8.0 mm (0.31″) |
| Glass Type | LT (low temperature) |
| Temperature Sensor | Yes |
| Amplifier | Yes |
| Body Material | Polypropylene |
| Dimensions | Length: 186 mm (7.32″)<br>Shaft length: 95 mm (3.74″)<br>Shaft diameter: 16 mm (0.62″) |
| Cable | 1 m (3.3′) with 8-pin DIN connector |
| Plug | HI1285-51: DIN<br>HI1285-61: DIN with CAL Check™ |

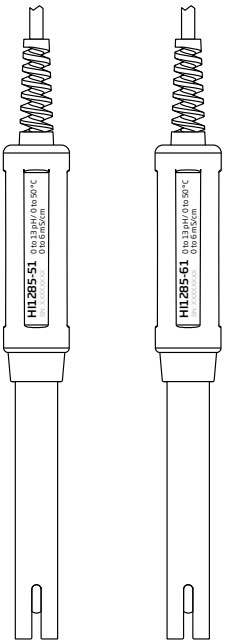

# 5. GENERAL OPERATIONS

## 5.1. BATTERY REPLACEMENT

To replace the batteries, follow the next steps:

- Turn OFF the instrument.
- Remove the three screws on the back of the instrument to open the battery compartment.
- Remove the old battery.
- Insert one new 9 V Alkaline battery in the battery compartment while paying attention to the correct polarity.
- Close the battery compartment using the three screws.

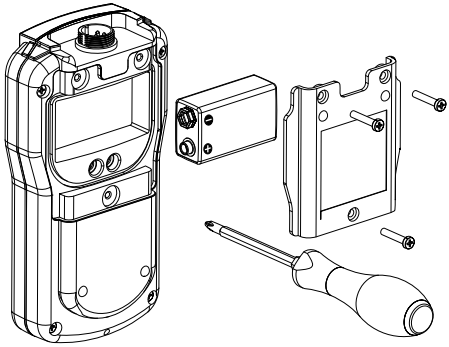

***Note:*** *If the battery percentage indicator is empty, the battery level is too low and the battery needs to be replaced.*

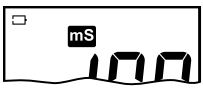


## 5.2. CONNECTING THE ELECTRODE

Align the DIN connector's 8 pins with the socket and push in the plug.

## 5.3. TURNING THE METER ON

Turn the instrument on by pressing the On/Off key.




## 5.4. SENSOR PREPARATION & CONDITIONING

1. Remove the protective cap
2. If the protective cap does not contain any liquid, pour HI70300 Storage solution into the cap.
3. Place it back on the sensor and soak for at least 30 min. before use.
4. Rinse with tap water prior to Calibration or Measurement.

# 6. CALIBRATION

## 6.1. pH

For high accuracy, frequent calibrations are recommended.
Additionally, the pH range should be recalibrated:

- Whenever the electrode is replaced.
- At least once a month.
- After testing aggressive chemicals.
- If HI9813-61 does not pass CAL Check test

### Preparation

Recommended pH calibration standard buffers: pH 4.01, 6.86 (NIST), 7.01, 9.18 (NIST), 10.01.
Use pH 7.01 (HI7007) for neutral samples, pH 4.01(HI7004) for acidic samples, pH 10.01 (HI7010) for alkaline samples.

### Procedure

1. Connect the probe and turn the meter on.
2. Press the **pH** key to select pH measurement mode.
3. Remove the protective cap and rinse the probe.
4. Pour buffer solution into a clean beaker.
5. Immerse the tip of the probe 4 cm (1 ½") in selected buffer and wait a few minutes for the measurement to stabilize.
6. Press the temperature key (°C) to measure buffer solution temperature. Take a note of the displayed value.
7. Rotate the calibration knob to adjust the pH value to match written buffer solution temperature. The pH calibration is now complete. (see pH VALUES AT VARIOUS TEMPERATURES section).

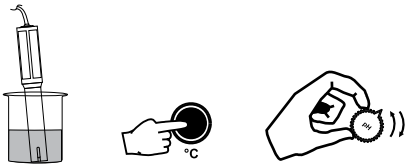


***Notes:*** *If, when rotating the knob, required value cannot be reached, the probe requires cleaning (see the PROBE MAINTENANCE section). If the issue still persists, the probe requires replacement.*

## 6.2. EC/TDS

### Preparation

Recommended EC calibration points: 1.41 mS/cm (1413 µS/cm) using HI70031 EC calibration solution, or 1500 ppm using HI70442 TDS calibration solution.
Calibrate the probe frequently for improved accuracy. Additionally, calibration should be performed:

- Whenever the probe is replaced
- After periodic maintenance

Always use fresh calibration solutions and perform electrode maintenance prior to calibration (see PROBE MAINTENANCE section).

### Procedure

1. Pour calibration solution into clean beakers sufficient to cover the sensing portion of the probe (4 cm/1 ½").
   If possible, use plastic beakers to minimize any EMC interferences. For accurate calibration and to minimize cross-contamination, use two beakers, one for rinsing the probe and one for calibration.
2. Raise and lower the probe in the standard to ensure the entire cell area is filled with standard.
3. Shake any bubbles off the two electrodes (prongs).
4. Center probe in beaker away from beaker walls.
5. Press the **mS/cm** (or **ppm**) key to select EC or TDS measurement mode.
6. Rotate the EC/TDS calibration knob until reading is displayed at 25 °C.



### EC/TDS Conversion Factor

HI9813-51 and HI9813-61 have a variable TDS conversion factor, automatically adjusted from 0.56 to 0.78 based on actual EC readings (based on 442 curve for natural water).

# 7. MEASUREMENT

## 7.1. pH

- Immerse the probe tip 4 cm (1 ½") into the sample.
- Press pH key to select pH measurement mode.
- Stir briefly and wait a few minutes for the measurement to stabilize. Measured pH value is displayed on the screen.






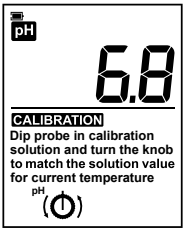


- If measurements are taken in different samples successively, rinse the probe thoroughly to minimize cross-contamination. After rinsing with water, rinse the probe with some of the sample to be measured next.

## 7.2. EC/TDS

- Immerse the probe tip 4 cm (1 ½") into the sample.
  If possible, use plastic beakers to minimize any EMC interferences.
- Tap the probe lightly on the bottom of the beaker to remove any air bubbles trapped inside.
- Press the mS/cm or ppm key to select EC or TDS measurement mode.






or




- Wait a few minutes. Displayed measured value (in mS/cm or ppm) is temperature compensated automatically.




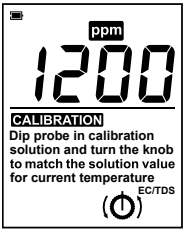

## 7.3. TEMPERATURE

- Immerse the tip of the probe 4 cm (1 ½") into the sample.
- Press the °C (Temperature) key.
- Stir briefly and wait a few minutes for the measurement to stabilize. Read value is displayed on the LCD.






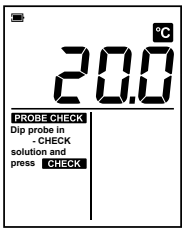


## 7.4. WARNINGS

### pH & EC/TDS

- If measured value is outside the parameter limit of the instrument, the maximum or minimum value is displayed blinking.
- If a broken/wrong probe has been connected, "– – –" is displayed.

### Temperature

- If the probe is not connected, or if a broken/wrong probe has been connected, "– – –" is displayed.

## 8. pH VALUES AT VARIOUS TEMPERATURES

| Temp | | pH Values | | | | |
|---|---|---|---|---|---|---|
| °C | °F | 4.01 | 6.86 | 7.01 | 9.18 | 10.01 |
| 0 | 32 | 4.01 | 6.98 | 7.13 | 9.46 | 10.32 |
| 5 | 41 | 4.00 | 6.95 | 7.10 | 9.39 | 10.24 |
| 10 | 50 | 4.00 | 6.92 | 7.07 | 9.33 | 10.18 |
| 15 | 59 | 4.00 | 6.90 | 7.05 | 9.27 | 10.12 |
| 20 | 68 | 4.00 | 6.88 | 7.03 | 9.22 | 10.06 |
| 25 | 77 | 4.01 | 6.86 | 7.01 | 9.18 | 10.01 |
| 30 | 86 | 4.02 | 6.85 | 7.00 | 9.14 | 9.96 |
| 35 | 95 | 4.03 | 6.84 | 6.99 | 9.11 | 9.92 |
| 40 | 104 | 4.04 | 6.84 | 6.98 | 9.07 | 9.88 |
| 45 | 113 | 4.05 | 6.83 | 6.98 | 9.04 | 9.85 |
| 50 | 122 | 4.06 | 6.83 | 6.98 | 9.01 | 9.82 |
| 55 | 131 | 4.08 | 6.84 | 6.98 | 8.99 | 9.79 |
| 60 | 140 | 4.09 | 6.84 | 6.98 | 8.97 | 9.77 |
| 65 | 149 | 4.11 | 6.84 | 6.99 | 8.95 | 9.76 |
| 70 | 158 | 4.12 | 6.85 | 6.99 | 8.93 | 9.75 |

For instance, if the buffer temperature is 25 °C, the display should show pH 4.0 or 7.0 or 10.0. If the buffer temperature is 10 °C, the display should show pH 4.0 or 7.0 or 10.1.

# 9. PROBE MAINTENANCE

## Periodic Maintenance

Proper care and maintenance is essential for accurate readings. Cleaning, calibrating, and appropriate storage extends the life of the probe.

- Inspect connector for corrosion and replace probe if necessary.
- Inspect probe and cable for cracks or points of broken insulation. If any present, replace the probe.
- After use rinse the probe with tap water and dry it.
- Monthly, a more thorough cleaning is advised. Clean the EC sensor with a non-abrasive, mild detergent.

## Cleaning & Conditioning

### pH portion

- Remove the protective cap.
- If the bulb and/or junction are dry, soak the electrode in HI70300 Storage solution for at least 30 minutes. To ensure a quick response time, the glass bulb and the junction should be kept moist and not allowed to dry.
- Rinse the sensor in flowing water then clean by soaking it for 1 minute in HI7073 Protein cleaning solution or HI7077 Oil and fat cleaning solution. After cleaning, soak the sensor in HI70300 Storage solution for 30 minutes before calibrating.

### EC portion

- After every series of measurements, rinse the probe with tap water.
- If a more thorough cleaning is required clean the sensor with a soft brush to loosen any debris.
- Use a mild detergent to remove oily coatings.
- Flush with purified water after cleaning.

***Notes:*** *Recalibrate the meter after cleaning. If, after cleaning, the meter still can not be calibrated, replace the probe.*

*For field applications, have a spare probe ready. When maintenance does not correct the issue, change the probe and recalibrate the meter.*

## Storage

- Store the sensor with a few drops of HI70300 Storage solution or pH 4.01 buffer in the protective cap. Tap water may also be used for a very short period (a few days).
- Never use distilled or deionized water to store pH sensors.

## CAL Check™ & Cleaning (HI9813-61)

**To check meter's calibration status:**

1. Rinse the probe with water
2. Immerse the tip of the probe 4 cm (1 ½") into HI50021 calibration check solution.

   ***Note:*** *A reading around pH 4.01 indicates that the probe is broken and requires replacement.*

3. Press the **Check** key.
   "Probe is OK" is displayed if the meter is calibrated.
   "Clean Probe and Calibrate" indicates that cleaning is required.




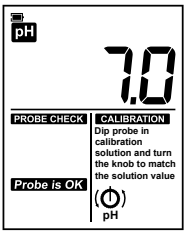


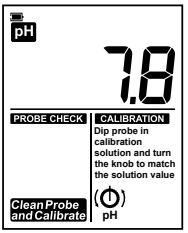


**To clean the probe:**

1. Immerse the tip of the probe 4 cm (1 ½") into HI700661 cleaning solution and soak for 5 minutes.
2. Rinse with tap water.
3. Immerse the tip of the probe in HI50021 calibration check solution.
4. Press the **Check** key.
   "Probe is OK" is displayed if the meter does not require calibration.
   "Clean Probe and Calibrate" indicates that the meter requires calibration. Follow pH Calibration steps.

# 10. ACCESSORIES

| Ordering information | Product description |
|---|---|
| **Probes** | |
| HI1285-51 | Combination, amplified pH/EC/TDS/temperature probe with built-in temperature sensor, 8-pin DIN connector and 1 m (3.3') cable |
| HI1285-61 | Combination, amplified pH/EC/TDS/temperature probe with built-in temperature sensor, with CAL Check™ feature, 8-pin DIN connector and 1 m (3.3') cable |
| **pH Buffer Solutions** | |
| HI7004L | pH 4.01 buffer solution, 500 mL |
| HI7006L | pH 6.86 buffer solution, 500 mL |
| HI7007L | pH 7.01 buffer solution, 500 mL |
| HI7009L | pH 9.18 buffer solution, 500 mL |
| HI7010L | pH 10.01 buffer solution, 500 mL |
| **Conductivity & TDS Calibration Solutions** | |
| HI7031L | 1413 µS/cm solution, 500 mL |
| HI70442L | 1500 ppm (mg/L) solution, 500 mL |
| **Other Solutions** | |
| HI50021P | Calibration check solution, 20 mL sachet (25 pcs.) |
| HI700661P | Cleaning solution, 20 mL sachet (25 pcs.) |
| HI70300L | Storage solution, 500 mL |
| HI7073L | Protein cleaning solution, 500 mL |
| HI7074L | Inorganic cleaning solution, 500 mL |
| HI7077L | Oil & fat cleaning solution, 500 mL |
| **Other Accessories** | |
| HI710007 | Shockproof rubber boot (blue) |
| HI710008 | Shockproof rubber boot (orange) |

## CERTIFICATION

All Hanna® instruments conform to the CE European Directives.




**Disposal of Electrical & Electronic Equipment.** The product should not be treated as household waste. Instead, hand it over to the appropriate collection point for the recycling of electrical and electronic equipment which will conserve natural resources.

**Disposal of waste batteries.** This product contains batteries, do not dispose of them with other household waste. Hand them over to the appropriate collection point for recycling.

Ensuring proper product and battery disposal prevents potential negative consequences for the environment and human health, which may be caused by inappropriate handling. For more information, contact your city, your local household waste disposal service, or the place of purchase.

## RECOMMENDATIONS FOR USERS

Before using these products, make sure they are entirely suitable for your specific application and the environment in which they are used.

Any variation introduced by the user to the supplied equipment may degrade the instruments' EMC performance.

For your and the instrument's safety do not use or store the instrument in hazardous environments.

## WARRANTY

HI9813-51 and HI9813-61 are warranted for two years against defects in workmanship and materials when used for their intended purpose and maintained according to instructions. Probes are guaranteed for six months. This warranty is limited to repair or replacement free of charge. Damage due to accidents, misuse, tampering, or lack of prescribed maintenance is not covered.

If service is required, contact your local Hanna Instruments® office. If under warranty, report the model number, date of purchase, serial number (engraved on the bottom of the meter), and the nature of the problem. If the repair is not covered by the warranty, you will be notified of the charges incurred. If the instrument is to be returned to Hanna Instruments, first obtain a Returned Goods Authorization (RGA) number from the Technical Service department and then send it with shipping costs prepaid. When shipping any instrument, make sure it is properly packed for complete protection.

Hanna Instruments® reserves the right to modify the design, construction or appearance of its products without advance notice.

# World Headquarters

Hanna Instruments Inc.
Highland Industrial Park
584 Park East Drive
Woonsocket, RI 02895 USA
www.hannainst.com

MAN9813-61

Printed in ROMANIA