VARIMETER
Undervoltage Relay, 3-phase
IK 9171, IL 9171, SK 9171, SL 9171

Translation
of the original instructions

DOLD

0223313


IK 9171


SK 9171


IL 9171


SL 9171

- According to IEC/EN 60255-1
- Monitoring of undervoltage in 3-phase system
- Also for single phase
- Without auxiliary supply
- Optionally for 3p3w systems
- LED indicator for state of output relay
- Independent of phase sequence
- 1 or 2 changeover contacts
- Optionally fixed or settable response value
- As option with phase sequence detection
- Optionally with or without N
- Optionally with off-delay t_1
- Opionally with on delay t_2
- Devices available in 2 enclosure versions:
  I-model: Depth 59 mm, with terminals at the bottom for installation systems and industrial distribution systems according to DIN 43880
  S-model: Depth 98 mm, with terminals at the top for cabinets with mounting plate and cable duct
- Width:
  IK 9171, SK 9171: 17.5 mm
  IL 9171, SL 9171: 35 mm

Approvals and Markings

CE | CCC [1] | UKCA [2]

[1] Only IL 9171; [2] Only IK/SK 9171

Function Diagram

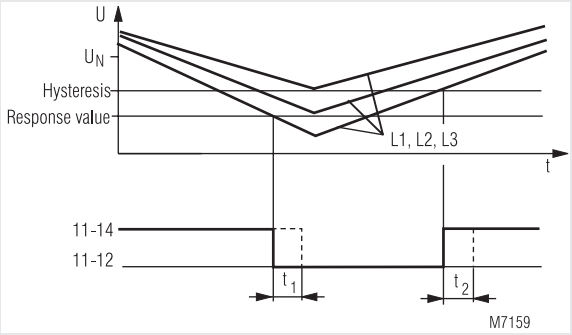

Application

Monitoring of voltage systems on undervoltage. Automatic switching to emergency supply or of emergency light in the case of phase loss according to DIN VDE 0100-710 or DIN VDE 0108.

Variant with t_2 is used in unstable voltage systems, where after phase failure detection the consumers should be energized one after the other. This ist done by setting the operate delay e.g. 0.1 ... 20 s of the different relays to different values.
This variant ist also used where a consumer after only short phase failure should not be started immediately (e.g. compressors).

Function

The arithmetic mean value of each phase is measured against N. The variants without N measure L1 and L3 against L2 (IK/SK 9171) and L1 and L2 against L3 (IL/SL 9171).

Circuit Diagrams

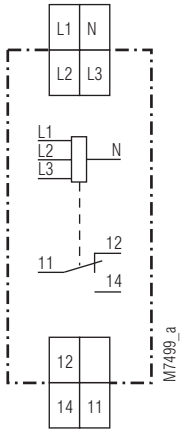

IK 9171.11,
SK 9171.11

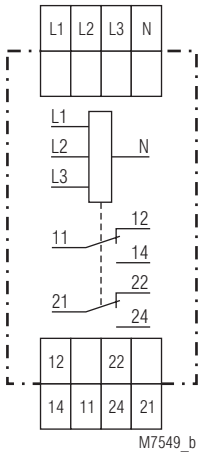

IL 9171.12,
SL 9171.12

Indicators

Yellow LED: Output contact active (11-14 closed)

Notes

To measure single-phase voltage terminals L1, L2, L3 have to be linked together.
The time delay t1 is only active if the voltage L1-N (IK/SK 9171) or L3-N (IL/SL 9171) is at least 0,5 U_N.

Please be aware, that devices of this variant show "good" state after applying power supply even when there is a a fault e.g. wrong phase sequence or undervoltage. Only after elapse of the time delay t1 the unit changes into "failure" state.

All technical data in this list relate to the state at the moment of edition. We reserve the rigth for technical improvements and changes at any time.

Technical Data

Input Circuit

Nominal voltage U_N

3-phase without neutral:	3 AC 100 V, 110 V, 127 V, 220 V, 230 V, 3 AC 240 V, 290 V, 400 V, 415 V, 440 V, 3 AC 480 V, 500 V
3-phase with neutral:	3/N AC 100 V / 58 V; 3/N AC 110 V / 64 V; 3/N AC 220 V / 127 V; 3/N AC 230 V / 133 V; 3/N AC 380 V /220 V; 3/N AC 400 V / 230 V; 3/N AC 415 V / 240 V; 3/N AC 440 V / 254 V; 3/N AC 480 V / 277 V; 3/N AC 500 V / 290 V
Max overload:	1.15 U_N continuously
Nominal consumption	
IK/SK 9171.11:	Approx. 6 VA
IL/SL 9171.12:	Approx. 8 VA
Frequency range:	45 ... 65 Hz

Setting ranges

Response value:	Fixed: 0.7 or 0.85 U_N Adjustable: 0.55 ... 1.05 U_N
Hysteresis:	Approx. 4 % of setting value
Time delay t_1 / t_2:	0.5 ... 20 s
Reaction time:	Approx. 100 ms

Output

Contacts		
IK/SK 9171.11:	1 changeover contact	
IL/SL 9171.12:	2 changeover contacts	
Contact material:	AgNi	
Switching voltage:	AC 250 V	
Thermal current I_{th}:	4 A	
Switching capacity		
to AC 15		
NO contact:	3 A / AC 230 V	IEC/EN 60947-5-1
NC contact:	1 A / AC 230 V	IEC/EN 60947-5-1
Electrical life		IEC/EN 60947-5-1
to AC 15 at 1 A, AC 230 V:	≥ 3 x 10^5 switching cycles	
Short circuit strength		
max. fuse rating:	4 A gG / gL	IEC/EN 60947-5-1
Mechanical life:	≥ 30 x 10^6 switching cycles	

General Data

Operating mode:	Continuous operation	
Temperature range:		
Operation:	- 20 ... + 60 °C	
Storage:	- 25 ... + 60 °C	
Relative air humidity:	93 % at 40 °C	
Altitude:	≤ 2000 m	
Clearance and creepage distances		
Rated impulse voltage / pollution degree:	4 kV / 2	IEC 60664-1
EMC		
Electrostatic discharge:	8 kV (air)	IEC/EN 61000-4-2
HF irradiation		
80 MHz ... 1 GHz:	20 V / m	IEC/EN 61000-4-3
1 GHz ... 2 GHz:	20 V / m	IEC/EN 61000-4-3
2 GHz ... 2.7 GHz:	1 V / m	IEC/EN 61000-4-3
Fast transients:	2 kV	IEC/EN 61000-4-4
Surge voltages		
Between		
wires for power supply:	2 kV	IEC/EN 61000-4-5
Between wire and ground:	4 kV	IEC/EN 61000-4-5
HF-wire guided:	30 V	IEC/EN 61000-4-6
Interference suppression:	Limit value class B	EN 55011
Degree of protection		
Housing:	IP 40	IEC/EN 60529
Terminals:	IP 20	IEC/EN 60529
Housing:	Thermoplastic with V0 behaviour according to UL subject 94	
Vibration resistance:	Amplitude 0.35 mm, frequency 10 ... 55 Hz, IEC/EN 60068-2-6	
Climate resistance:	20 / 060 / 04	IEC/EN 60068-1
Terminal designation:	EN 50005	
Wire connection:	2 x 2.5 mm² solid or 2 x 1.5 mm² stranded ferruled DIN 46228-1/-2/-3/-4	
Wire fixing:	Flat terminals with self-lifting clamping piece	IEC/EN 60999-1
Fixing torque:	0.8 Nm	

Technical Data

Mounting:	DIN rail	IEC/EN 60715
Weight		
IK 9171:	65 g	
SK 9171:	83 g	
IL 9171:	110 g	
SL 9171:	137 g	

Dimensions

Width x height x depth	
IK 9171:	17.5 x 90 x 59 mm
SK 9171:	17.5 x 90 x 98 mm
IL 9171:	35 x 90 x 59 mm
SL 9171:	35 x 90 x 98 mm

Classification to DIN EN 50155 for IK 9171

Vibration and shock resistance:	Category 1, Class B	IEC/EN 61373
Protective coating of the PCB:	No	

Standard Type

IK 9171.11/200 3/N AC 400/230 V 50/60 Hz 0.85 U_N
Article number: 0049292
SK 9171.11/200 3/N AC 400/230V 50/60Hz 0.85 U_N
Article number: 0054744

- Output: 1 changeover contact
- Nominal voltage U_N: 3/N AC 400/230 V
- Detection of undervoltage at < 0.85 U_N
- Fixed response value: 0.85 U_N
- No time delay
- For 3p3w connection
- Width: 17.5 mm

Variants

I_ 9171/001

- 0 NC circuit operation with N
- 1 NC circuit operation without N
- 0 Without time delay
- 3 Settable time delay t_1
- 4 Settable time delay t_2
- 0 Settable response value
- 2 Fixed response value
- K Width 17.5 mm
- L Width 35 mm

IK 9171.11/034: - With settable time t_1
- NC circuit operation without N
- Detection of phase sequence

IL 9171.12/801: As Standard Type /200 but output relay with goldplated contacts. This module is also suitable for switching small loads. The contacts also permit the maximum switching current (4 A). However, since the gold plating will be burnt off at this current level, the device is no longer suitable for switching small loads after this.

SK 9171.11/800: Same as IK 9171.11/201 but with increased transient and climate resistance

Ordering example for variants

IK 9171 .11 /_ _ _ 3 AC 400 V 50/60 Hz 0.55 ... 1.05 U_N 0.5 ... 20 s

- Time delay t_2
- Response value
- Nominal frequency
- Nominal voltage
- Variant, if required
- Contact
- Type