Lift handle | 60x75
Art.nr: 421773 - 421777

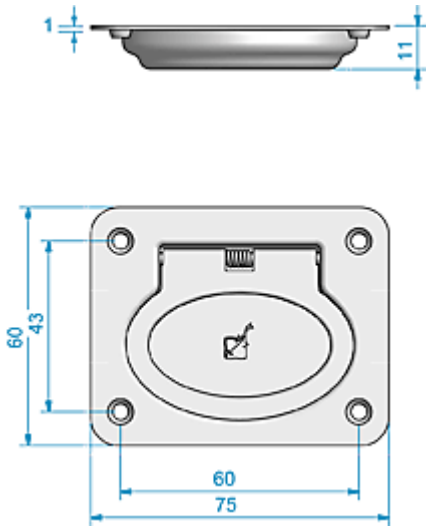





Art.nr	Material	Treatment
421773	SS AISI 304	Electro polished

Lift handle with retrogressive spring