3/2 directional valve, LS04-AF series

- 2x3/2
- Qn = 175-310 l/min
- NO/NO NC/NC NC/NO
- Pipe connection
- Compressed air connection output : Ø 4 Ø 6
- Electrical connection : Plug, M8, 3-pin
- Manual override : with detent
- Pilot : Internal



Type	Spool valve, positive overlapping
Activation	Electrically
Pilot	Internal
Sealing principle	Soft sealing
Working pressure min./max.	3 ... 7 bar
Ambient temperature min./max.	-10 ... 50 °C
Medium temperature min./max.	-10 ... 50 °C
Medium	Compressed air
Max. particle size	5 µm
Oil content of compressed air	0 ... 5 mg/m³
Nominal flow Qn	See table below
Connector standard	DIN EN 60947-5-2
Protection class acc. to DIN EN 61140 Electrically	Class III
Protection class with connection	IP65
Protective circuit	Z-diode
LED status display	Yellow
Duty cycle	100 %
Typ. switch-on time	12 ms
Typ. switch-off time	15 ms
Generic emission standard in accordance with	EN 61000-6-4:2002
Generic immunity standard in accordance with	IEC 61000-6-2:2005
mounting screws	M3
Mounting screw tightening torque	0,5 Nm
Weight	0,064 kg

Technical data

Part No.		MO		Compressed air connection
				Input
R422103577			NO/NO	Ø 4
R422103578			NO/NO	Ø 6
R422103585			NC/NC	Ø 4
R422103586			NC/NC	Ø 6
R422103593			NC/NO	Ø 4
R422103594			NC/NO	Ø 6

Part No.	Compressed air connection	Compressed air connection
	Output	Exhaust
R422103577	Ø 4	Ø 4
R422103578	Ø 6	Ø 6
R422103585	Ø 4	Ø 4
R422103586	Ø 6	Ø 6
R422103593	Ø 4	Ø 4
R422103594	Ø 6	Ø 6

Part No.	Operational voltage	Voltage tolerance	Power consumption
	DC	DC	DC
R422103577	24 V	-10% / +10%	1,3 W
R422103578	24 V	-10% / +10%	1,3 W
R422103585	24 V	-10% / +10%	1,3 W
R422103586	24 V	-10% / +10%	1,3 W
R422103593	24 V	-10% / +10%	1,3 W
R422103594	24 V	-10% / +10%	1,3 W

Part No.	Flow conductance	Flow conductance	Nominal flow Qn
	b	C-value	
R422103577	0,4	0,8 l/(s*bar)	175 l/min
R422103578	0,25	1,2 l/(s*bar)	250 l/min
R422103585	0,4	0,8 l/(s*bar)	180 l/min
R422103586	0,3	1,5 l/(s*bar)	310 l/min
R422103593	0,4	0,8 l/(s*bar)	175 l/min
R422103594	0,25	1,2 l/(s*bar)	250 l/min

Nominal flow Qn at 6 bar and Δp = 1 bar, MO = Manual override

Technical information

The min. control pressure must be adhered to, since otherwise faulty switching and valve failure may result!
The pressure dew point must be at least 15 °C under ambient and medium temperature and may not exceed 3 °C .
The oil content of compressed air must remain constant during the life cycle.
Use only the approved oils from AVENTICS. Further information can be found in the “Technical information” document (available in the MediaCentre).
A duty cycle of 100 percent is only valid for single valves.

Technical information

Material	
Housing	Polyoxymethylene
Seals	Acrylonitrile butadiene rubber Hydrogenated nitrile butadiene rubber Polyurethane

Dimensions

Dimensions, double solenoid

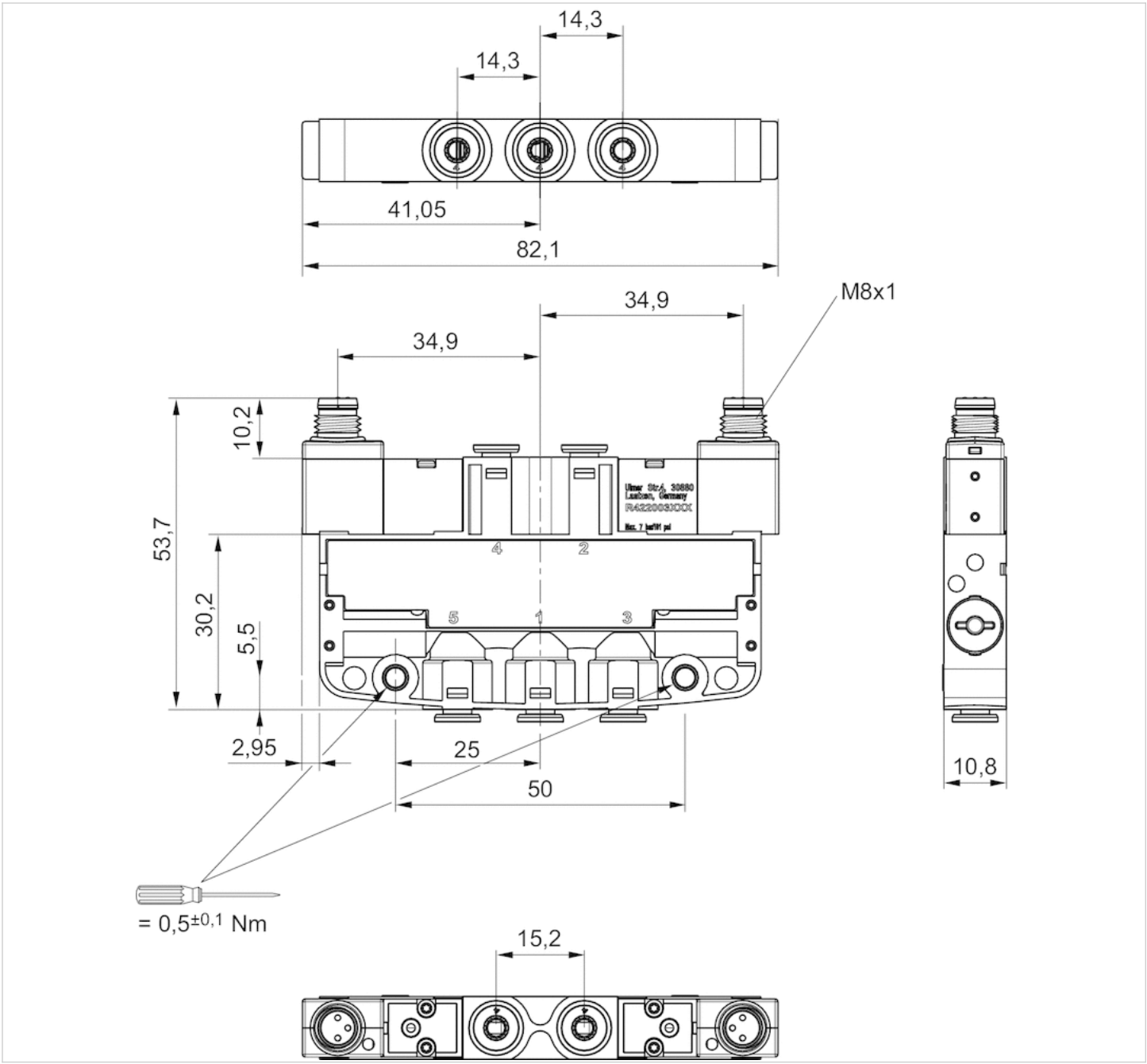

Pin assignments

PIN assignment for valve plug connectors, 3-pin

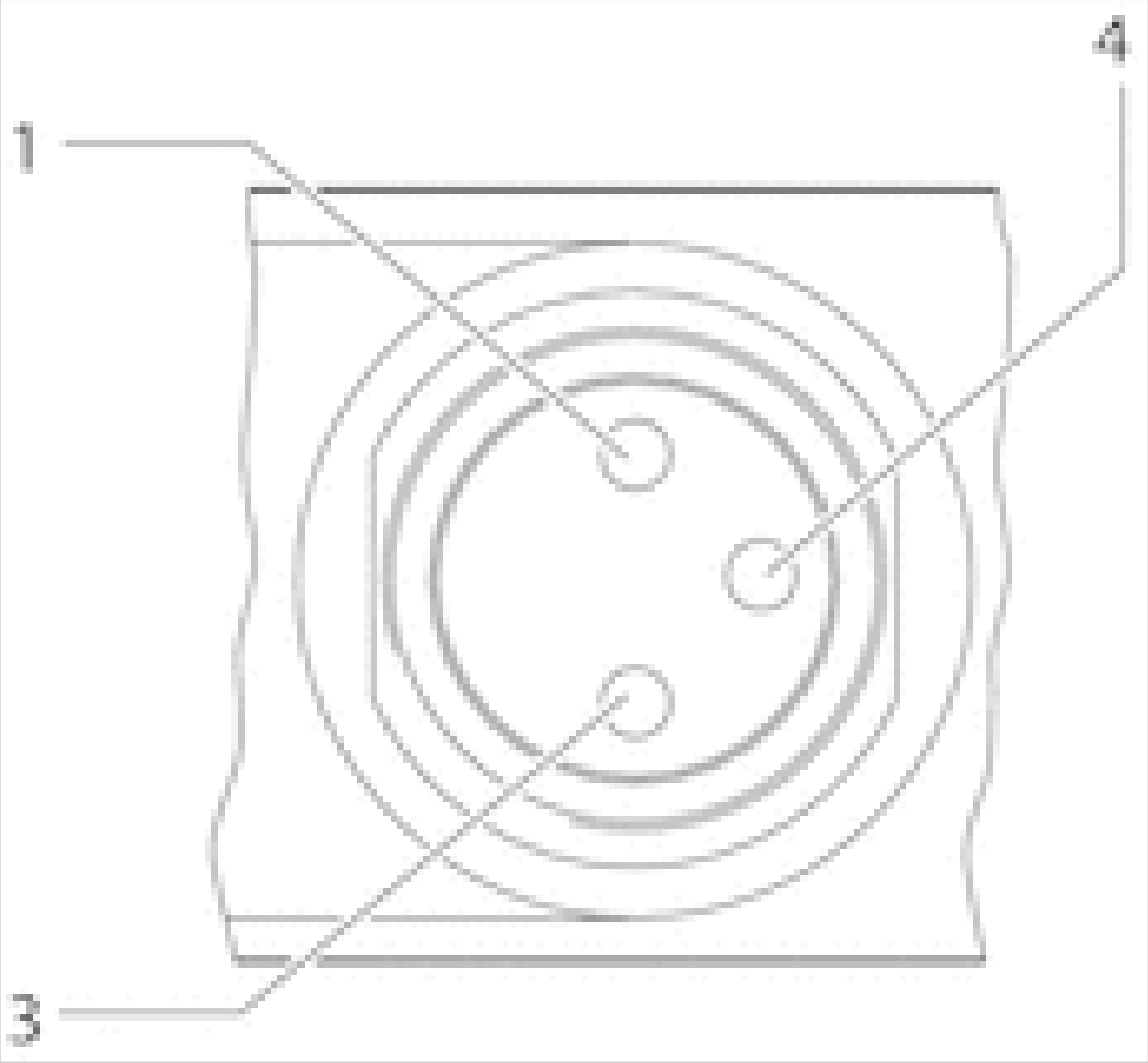

1) Pin not assigned
3) 0 V
4) 24 V

Note: Bi-polar protective circuit to prevent overvoltage