720 GFX Series Sealed and Rugged Keypads

These tough, water resistant keypads feature moving, tactile keys with a responsive 'over-centre' action. Keytop graphics can be easily customized by the use of legend tiles under 'snap-on' transparent keycaps. Once snapped into place the tamper resistant keycaps encapsulate and protect the keytop graphics.



Connection Details for 4 Key Keypad

CONTACT CONNECTIONS

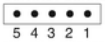

5 4 3 2 1

(As viewed from rear of keypad)



KEY LOCATION

(As viewed from front of keypad)

CONTACT MATRIX	
CONNEC. PIN	ROW/ COLUMN
1	common
2	D
3	C
4	B
5	A

Connection Details for 12 Key Keypad

CONTACT CONNECTIONS

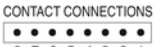

8 7 6 5 4 3 2 1

(As viewed from rear of keypad)

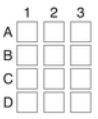

KEY LOCATION

(As viewed from front of keypad)

CONTACT MATRIX	
CONNEC. PIN	ROW/ COLUMN
1	A
2	B
3	1
4	2
5	3
6	-
7	D
8	C

Connection Details for 16 Key Keypad

CONTACT CONNECTIONS

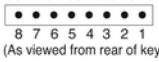

8 7 6 5 4 3 2 1

(As viewed from rear of keypad)

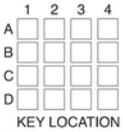

KEY LOCATION

(As viewed from front of keypad)

CONTACT MATRIX	
CONNEC. PIN	ROW/ COLUMN
1	A
2	B
3	1
4	2
5	3
6	4
7	D
8	C

The keypad can be installed on the surface or under the panel.
(Underpanel Installation Instructions are in the Underpanel Fitting Kit).
Fit the supplied silicone seal into the seal groove on the keypad
Use the groove on top for underpanel, and on back for surface fix.
The wide part of the seal goes into the groove – see picture below
of the seal fitted to the back of the keypad.

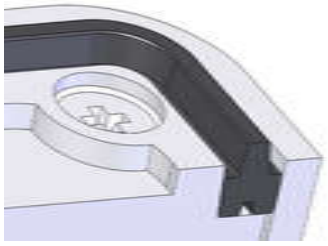

To customise the layout place a colour tile and a legend tile onto the key base, and clip the keycap over the top.

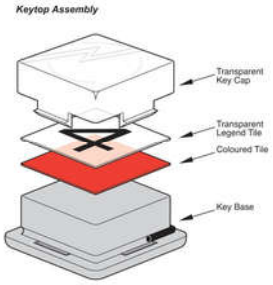

White Colour Tiles and Set A Legends are included; Set A Legends comprises :-

1 2 3 4 5 6 7 8 9 0 + = x ÷ * # . ← ↑ → ↓ AC I/O ENT CE/E

Additional Legends (Tile sets B,C,D,E,F,) & Colours (White, Grey, Red, Green, Blue, Yellow) are available

Electrical

Contact Bounce	**5 ms (max)**
Contact Resistance	**100 ohms (max)**
Insulation Resistance	**50 Mohms (min)**
Breakdown Voltage	**500 V AC (max 60 secs.)**
Switch Rating	**24V DC 50mA (max)**
Connection	**X-Y Matrix**

Mechanical

Operational Life	**2 million cycles (min) per key**
Keytop Travel	**1.4mm nominal**
Actuation Force	**150 grams nominal**
Connector	**0.1"pitch, gold plated square pin**
Mating Connector	**Molex 2695 Series or equivalent**

Performance

Operational Temp	**-20°C to 60°C**
Impact Rating	**5 J**
Vibration/Shock	**ETSI 300 019 5M3**
Water / Dust sealed	**IP65 (when fixed to suitable panel)**

Part Numbers

7207-041020	**720GFX SERIES 4 KEY**
7207-121020	**720GFXSERIES 12 KEY**
7207-161020	**720GFX SERIES 16 KEY**
7200-FK020	**UNDERPANEL FITTING KIT**

Accessories

4200-00	**RS232 Encoder Interface Module**
4500-00	**450 USB Encoder Interface Module**
4500-10	**450i USB Encoder Interface Module with Buzzer and Illumination Control**
Colour & Legend Tiles & Replacement Seals	go to www.storm-interface.com

Dimensions

Overall sizes	**See following page.**
Panel Cutout DXF	**Download .dxf and .stp files from**
Surface Model STEP	**www.storm-interface.com**



Datasheet 072-x7-08KT Rev 1 Oct 2013

Whilst every effort is made to ensure details are correct at time of print, specifications are subject to change without notice
www.storm-interface.com

FM 39602

Storm is a trademark of Keymat Technology Ltd.
Storm Interface is a trading name of Keymat Technology Ltd.
Storm Interface products include technology protected by international patents and design registration. All rights reserved

720 GFX Series Sealed and Rugged Keypads

Install the keypad onto the surface of a panel as follows :-

- Fit the seal to the rear of the keypad
- Place the keypad onto the panel and fit the self locking nuts to the studs on the back
- Recommended tightening torque 50Ncm

Side View : 4, 12, 16

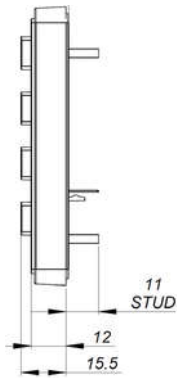

Front and Back View : 4 way

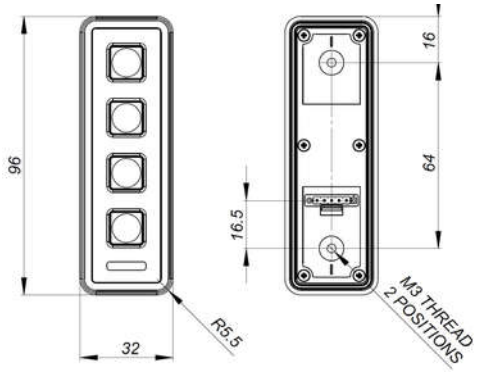

Panel Cutout : 4 way

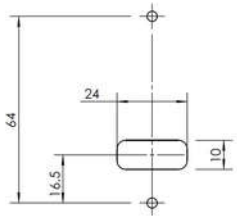

Front and Back View, 12 way

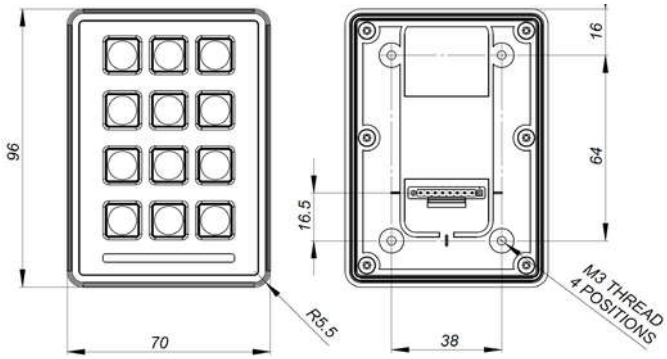

Panel Cutout : 12 way

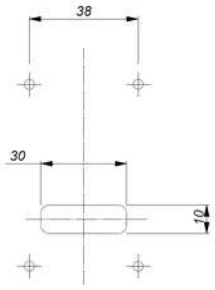

Front and Back View, 16 way

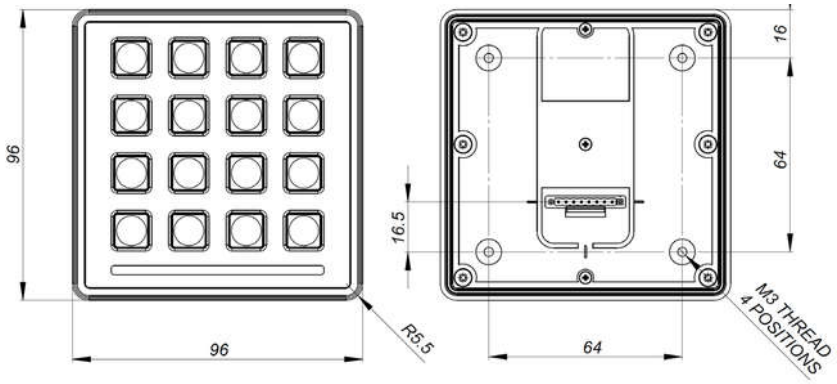

Panel Cutout : 16 way

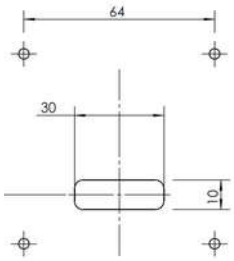

All panel dims in mm.
Corner Rads all M3

Whilst every effort is made to ensure details are correct at time of print, specifications are subject to change without notice
www.storm-interface.com

FM 39602

Storm is a trademark of Keymat Technology Ltd.
Storm Interface is a trading name of Keymat Technology Ltd.
Storm Interface products include technology protected by international patents and design registration. All rights reserved