# KSC Series
# Sealed Tact Switch for SMT

## *Features/Benefits*

- ***Positive tactile feeling***
- ***J or G terminations***
- ***Various heights***
- ***IP67***

## *Typical Applications*

- ***Automotive***
- ***Cellular phones***
- ***Industrial electronics***
- ***Network infrastructure and IT***
- ***Elevator***

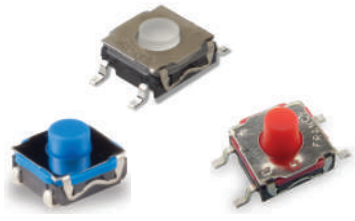



## Specification

FUNCTION: Momentary action
CONTACT ARRANGEMENT: 1 make contact = SPST, N.O.
TERMINALS: J bend & Gullwing type for SMT
SEALING: IP67 except KSC5 (IP50)

## Liability Limitation

This datasheet does not provide enough information for applications that require a certain level of quality or safety such as automotive, medical systems, or safety equipement. Please contact customer service for the contractual specification package.

## Environmental

| | Silver | Gold |
|---|---|---|
| OPERATING TEMPERATURE: | -40˚C to 85˚C | -40˚C to 125˚C |
| STORAGE TEMPERATURE: | -55˚C to 85˚C | -55˚C to 125˚C |

## Process

SOLDERING: Depending on the application, this component is suited to the following methods:
– Terminals being silver or gold plated over a nickel barrier, the use of slightly activated flux is suitable.
– Soldering on double wave machine for vertical versions: soldering time ≤ 5 sec.
– Cleaning according to typical washing processes.
– Infrared Reflow Soldering in accordance with IEC 61760-1.

## Electrical

| | Silver | Gold |
|---|---|---|
| MAXIMUM POWER: | 1 VA | 0.2 VA |
| MAXIMUM VOLTAGE: | 32 VDC | 32 VDC |
| MINIMUM VOLTAGE: | 20 mV | 20 mV |
| MAXIMUM CURRENT: | 50 mA | 10 mA |
| MINIMUM CURRENT: | 1 mA* | 0.1 mA |

DIELECTRIC STRENGTH (50 Hz, 1 min.): ≥ 250 Vrms
CONTACT RESISTANCE: ≤ 100mΩ
INSULATION RESISTANCE (100 V): ≥ 10M Ω
BOUNCE TIME: ≤ 1 ms
* Ultra low current with 10 µA - 1 VDC version are available upon request for KSC2 and KSC4

## Packaging

Tape and Reel (see series for quantity information)

**NOTE**: Specifications listed above are for switches with standard options.

## KSC Product Range

| KSC1 | KSC2 | KSC3 | KSC4 | KSC5 | KSC6 | KSC7 | KSC8 | KSC9 | KSC10 |
|---|---|---|---|---|---|---|---|---|---|
| Without actuator | Soft actuator | Hard actuator | Soft actuator | Hard actuator | Hard actuator | Soft actuator | Hard actuator | Hard actuator | Soft actuator |
| H = 2.5 mm | H = 3.5 mm | H = 3.5 mm | H = 5.2 mm | H = 5.6 mm | H = 7.7 mm | H = 4.3 mm | H = 4.9 mm | H = 7.7 mm compatible with button | H = 4.9 mm |
| IP67 | IP67 | IP67 | IP67 | IP50 | IP67 | IP67 | IP67 | IP67 | IP67 |



Note: KSC Series is subject to variants. Please contact customer service for other options.

# KSC Series
# Sealed Tact Switch for SMT

## J J BEND

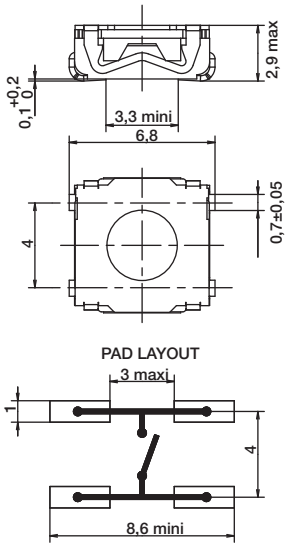


## G GULLWING

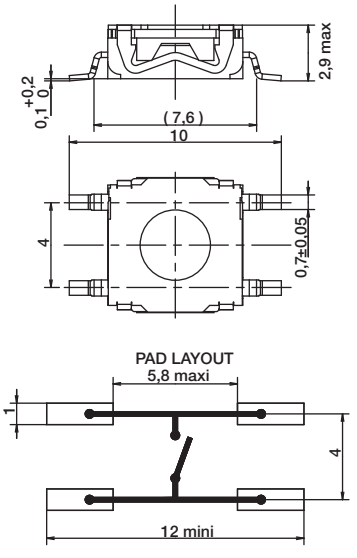


### 12 MM

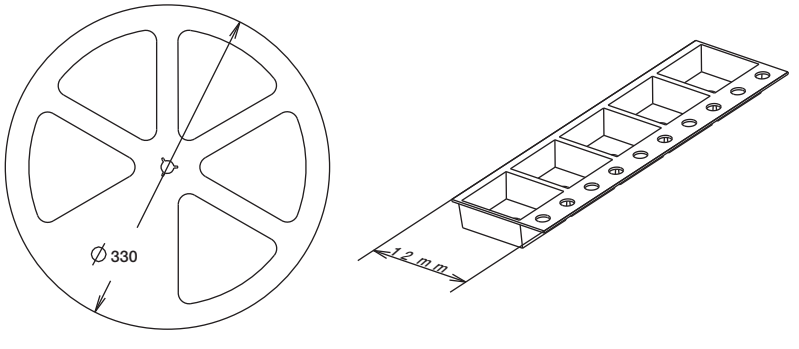


### 16 MM

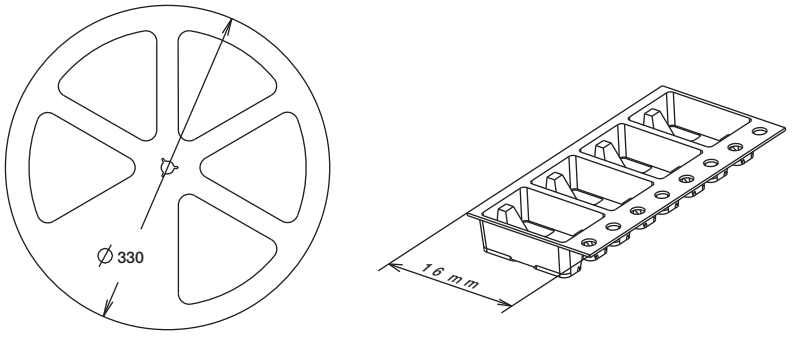


| 12 mm | Pieces | 16 mm | Pieces |
|---|---|---|---|
| KSC1J | 2,000 | KSC1G | 2,000 |
| KSC2J | 2,000 | KSC2G | 2,000 |
| KSC3J | 2,000 | KSC3G | 2,000 |
| | | KSC4J & G | 1,000 |
| | | KSC5J & G | 1,000 |
| | | KSC6J & G | 750 |
| | | KSC7J & G | 1,000 |
| | | KSC8J & G | 1,000 |
| | | KSC9J & G | 750 |
| | | KSC10J & G | 1,000 |

First Angle Projection

*Dimensions are shown: mm*
*Specifications and dimensions subject to change*

### KSC7 soft actuator 4,3 mm high



| Type | Operating force FA (Newtons) | Operating life (operations) | Travel (mm) |
|---|---|---|---|
| KSC701 | 1.6 ± 0.6 | 5,000,000 | 0.3 ± 0.2 |
| KSC721 | 2.25 ± 0.55 | 300,000 | 0.3 ± 0.15 |
| KSC741 | 3.9 ± 1 | 300,000 | 0.4 ± 0.2 |

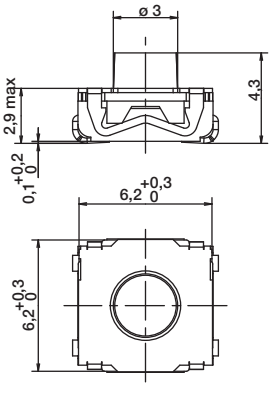


## Packaging

Switches delivered on continuous tape & reels of 1,000 pieces
Dimensions according to EIA RS-481/ IEC 60286-3 standard
External diameter 330 ± 2 mm

## How To Order

Our easy build-a-switch concept allows you to mix and match options to create the switch you need. To order, select desired option from each category and place it in the appropriate box.

**However, please note that all the combinations of these options are not feasible.**
**For any part number different from those listed above, please consult your local representative.**

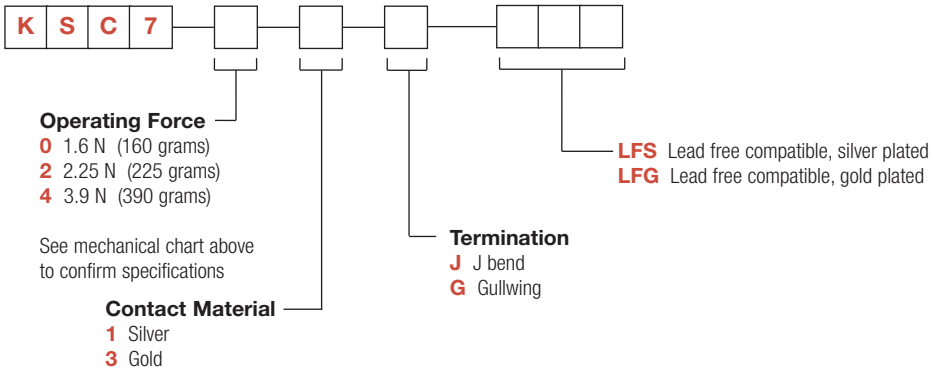


First Angle Projection

*Dimensions are shown: mm*
*Specifications and dimensions subject to change*