Hybrid Oscillator and Demodulator LVDT Modules

Operating Instructions

The oscillator is designed to produce a sine wave carrier for driving the transducer and a square wave reference for the demodulator. The nominal output is 5 Vrms at 5 or 10 kHz, but the device can operate over 1 to 20 kHz, at 0.5 to 7 Vrms. It can also provide an output voltage proportional to supply voltage, or an external reference.

The demodulator is designed to amplify the output from the transducer, and convert it to a dc voltage. It provides a nominal 5 VDC output (linear to 10 V) for inputs from 2.5 mV to 3.75 Vrms (corresponding to 0.5 mV/V to 750 mV/V for 5 V energisation of transducer). 22 gains can be selected using links, and an external fine gain control can be added.

Figure 1. Demodulator block diagram

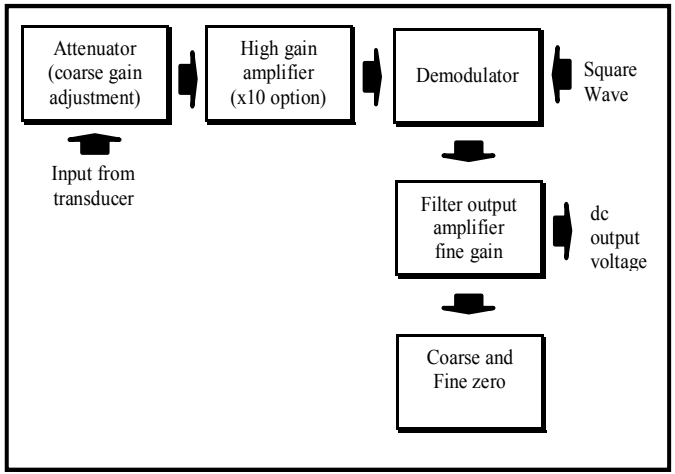

Figure 2. Oscillator block diagram

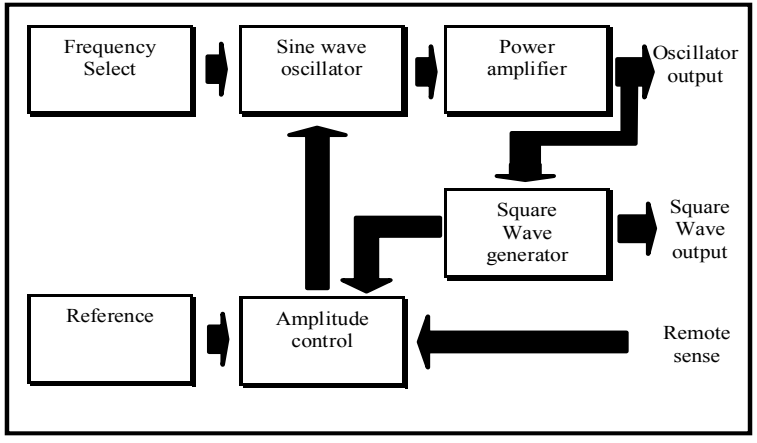

Note i) The demodulator output is protected against open circuits and short circuits, but loading the output with a medium capacitive load in the region of 10 nF can cause high frequency oscillation.

ii) Neither the oscillator nor the demodulator should be connected directly to the mains supply.

iii) Pins 1 and 19, 2 and 16, 4 and 9, 10 and 15 are duplicated, so that either pin may be used, but in the case of the oscillator output pin 2 should be used for optimum performance.

iv) Internal links should not be used to carry power for other circuits.

v) If low supply voltages are required, output voltage will need to be lowered. Output voltage will remain linear to within 5 V of the supply rails and further if output is not fully loaded.

The pins for the oscillator and demodulator are given on the next page.

Figure 3. Connections

Oscillator	Demodulator	Pin
- 15 V supply	dc output voltage	1
Oscillator output	Fine gain adjust	2
Frequency select (CA)	Filter adjust (F2)	3
Frequency select (R10B)	Filter adjust (F1)	4
Frequency select (R5A)	Fine zero adjust (ZP)	5
Frequency select (R5B)	Coarse zero (Z1)	6
Frequency select (R10A)	Coarse zero (Z2)	7
Synchronising pin (Synch)	Square wave input	8
Frequency select (R10B)	Coarse zero (Z3)	9
+ 15 V supply	x 10 gain select	10
Not normally used	+ 15 V supply	11
Reference in	0V supply	12
Remote oscillator sense	- 15 V supply	13
Square wave output	Gain tapping to pin 15 to 20 (Tap)	14
+ 15 V supply	500 mV/V	15
Oscillator output	200 mV/V	16
0V supply	100 mV/V	17
Ratio output	50 mV/V	18
- 15 V supply	20 mV/V	19
Reference output	10 mV/V & Input from Transducer	20

A number of pins are duplicated on the oscillator, and are linked internally.

Operation

The oscillator

Connecting the power supplies to the oscillator is simple, as either of the two ±15 V pins can be used to simplify PCB layout. Decoupling is included in the hybrid and is therefore not required, though it should still be included for any other circuitry on the PCB.
The hybrid is tolerant of having one supply removed in the event of a fault and this should cause no damage, but reversal of the supplies can destroy the device. Hence, if supply reversal is likely, it would be wise to protect the whole PCB with diodes. It is not necessary for the two supplies to track each other exactly and a discrepancy of ±1 V should have a negligible effect on performance.

Figure 4. Basic oscillator configuration

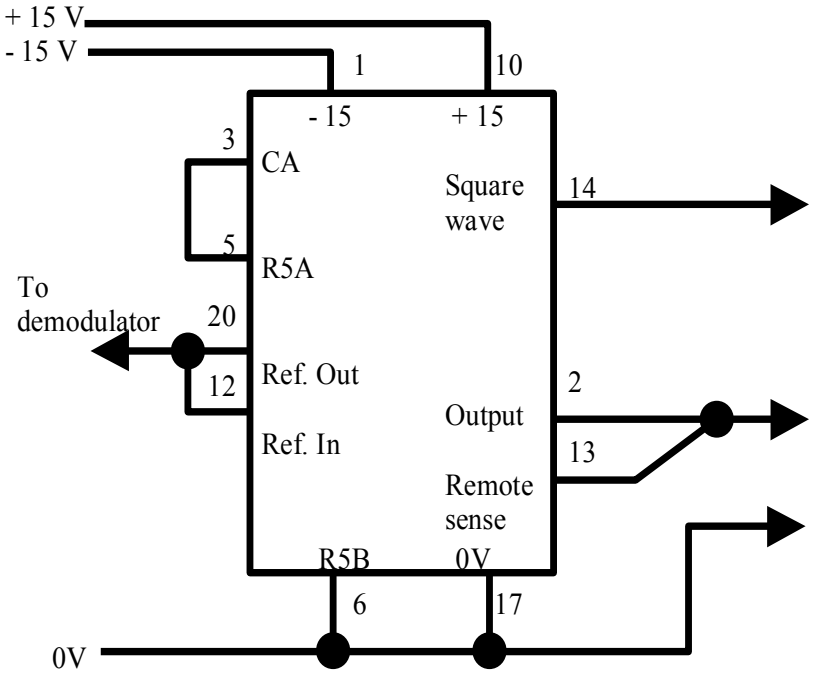

This provides the standard fixed 5 Vrms, 5 kHz output. Frequency is set by linking R5A to CA and R5B to 0V. Amplitude is set by linking Ref. Out to Ref. In.

The use of the reference means the 5 Vrms is fixed.
The remote sense is linked to output to allow control of amplitude.
The reference output is available for use by the demodulator or other circuitry that may require it. The maximum current that may be drawn from it is:

$$I(mA) = \frac{Supply}{12.1} - 0.35$$

For instance; if the supply is ±15 V, maximum current is 0.89 mA.
The square wave is output to the demodulator.
If it is required to use 10 kHz instead of 5 kHz, use R10A and R10B instead of R5A and R5B. If 15 kHz is required use both.
If it is required to be operated in ratiometric mode, link Ref. In to Ratio Out instead of Ref. Out.
If it is required to synchronise oscillators, this is achieved by linking Pin 8 on each oscillator together. All the oscillators should be set to the same nominal frequency and amplitude.

Figure 5. Two oscillator set to 10 kHz in ratiometric mode and synchronised

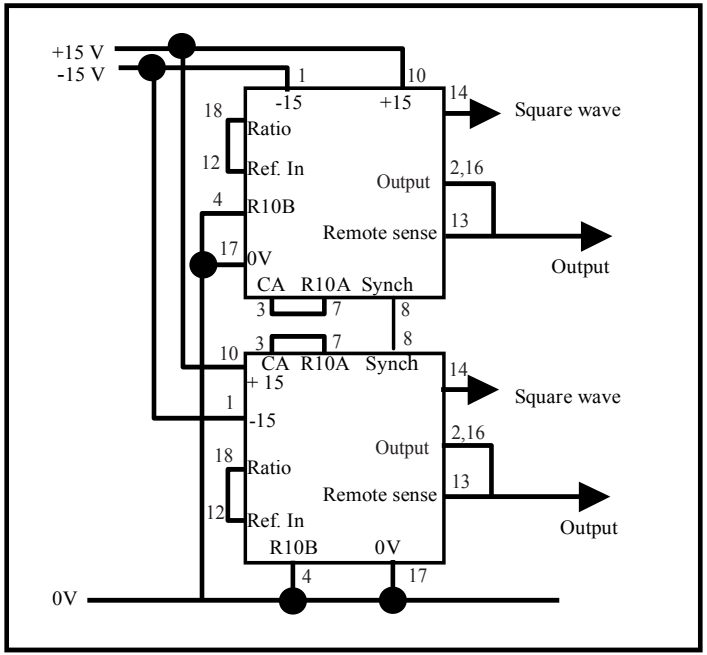

For other frequencies, it is necessary to add two external resistors. Ignore R5A, R5B, R10A, R10B and wire up as follows:

Figure 6. Operation at different frequencies

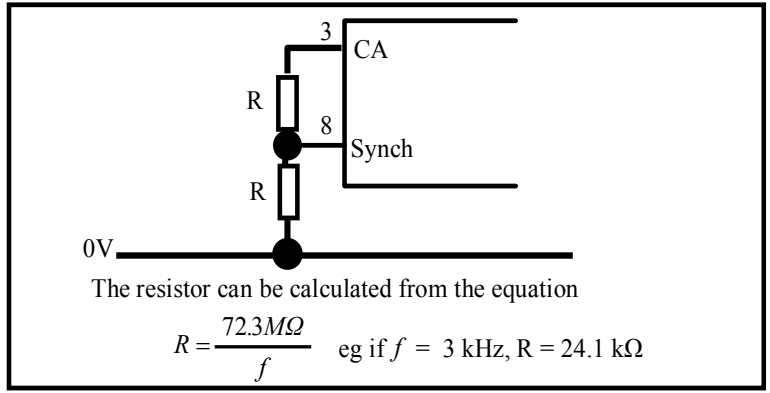

In practice, this equation will give good results at low frequencies, due to phase shifts in the internal amplifiers.
For other output amplitudes than 5 Vrms, there are two solutions. If the output is to be reduced, a resistor should be put between Ref Out and Ref. In instead of a wire link. If it is to be increased, the resistor should be put in series with the remote sense input.

The Demodulator

The demodulator is similar to the oscillator with regard to power supplies. It is internally decoupled and behaves the same under supply fault conditions.

Figure 7. Basic demodulator configuration

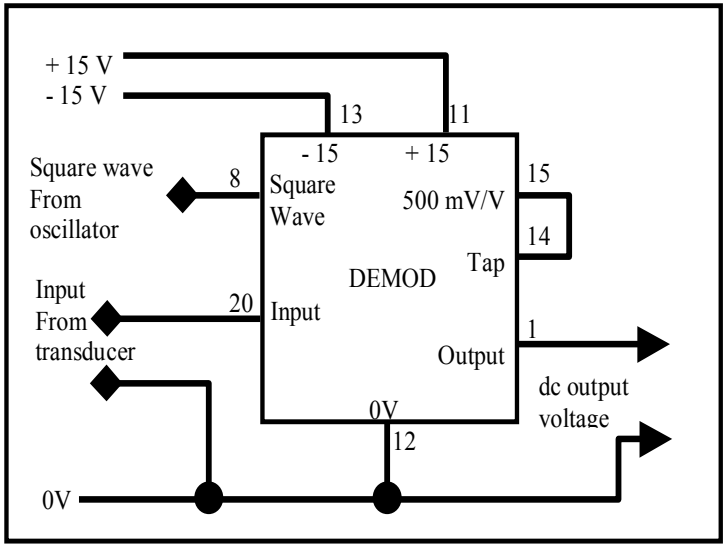

This is a very basic set up, to give 5 VDC output with a 2.5 Vrms input (500 mV/V transducer). Note that it is essential to have good layout of the square waves track, avoiding other connections to the demodulator, especially pins 2, 3, 4, 5, 6, 7, 8, 9 and 10. This is because the very fast switching of the square wave can cause pick up, which will introduce spikes onto the output voltage. It is also important to keep the coarse gain select link to the tap input short and away from interference sources.

The above circuit does not include any zero offset, and has a single gain. Other gains (in accordance with the table given earlier) can be selected instead. Tap can be limited to any of the 6 coarse gain positions to give acceptable input sensitivities of 10, 20, 50, 100, 200 or 500 mV/V.

If the x10 pin is linked to 0V, this will increase the gain 10 times which means that the necessary transducer sensitivity is reduced 10 times, to give ranges of 1, 2, 5, 10, 20 or 50 mV/V (3 overlap the original 6). In addition to this the gain can be doubled or reduced by 1.5 times using the fine gain adjust pin. If the fine gain adjust is connected to 0V this doubles the gain, giving acceptable sensitivities of 0.5, 1, 2.5... 100, 250 mV/V. If the fine gain adjust is connected to the dc output, this reduces the gain, giving acceptable sensitivities of 1.5, 2, 7.5...300, 750 mV/V. Refer to the table to see what to link for a particular gain. Note that the sensitivities quoted are for 5 VDC output and 5 Vrms oscillator. Other outputs can be calculated using the gain figures given.

dc output = oscillator volts x transducer sensitivity x demodulator gain.

Figure 8. Demodulator as described in electrical specifications which is a two pole, 500 Hz cut off low pass filter

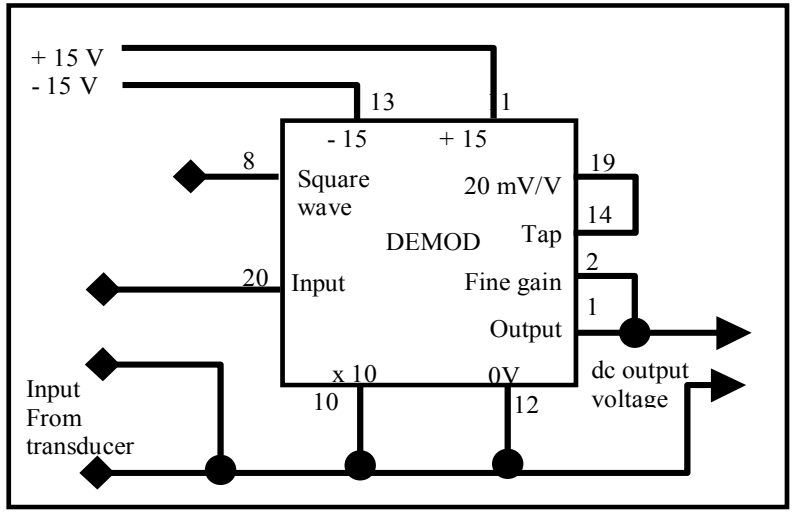

The demodulator contains a number of options that can be selected by linking pins which will not require the addition of any external components to obtain other required functions.

A wide range of gains can be selected by linking the fine gain adjust pin to 0V or to the dc output. These gains are listed in the following table.

Figure 9.

Range	Gain	mV input for 5 VDC output	mV/V transducer sensitivity for 5 VDC output and 5 Vrms oscillator	Coarse gain selected (mV/V)	Link fine gain adjust to	x10 linked to 0V
1	1.33	3750	750	500	Output	No
2	2	2500	500	500	—	No
3	4	1250	250	500	0V	No
4	3.33	1500	300	200	Output	No
5	5	1000	200	200	—	No
6	10	500	100	200	0V	No
7	6.67	750	150	100	Output	No
8	10	500	100	100	—	No
9	20	250	50	100	0V	No
10	13.3	375	75	50	Output	No
11	20	250	50	50	—	No.
12	40	125	25	50	0V	No
13	33.3	150	30	20	Output	No
14	50	100	20	20	—	No
15	100	50	10	20	0V	No
16	66.7	75	15	10	Output	No
17	100	50	10	10	—	No
18	200	25	5	10	0V	No
19	133	37.5	7.5	50	Output	Yes
20	200	25	5	50	—	Yes
21	400	12.5	2.5	50	0V	Yes
22	333	15	3	20	Output	Yes
23	500	10	2	20	—	Yes
24	1000	5	1	20	0V	Yes
25	667	7.5	1.5	10	Output	Yes
26	1000	5	1	10	—	Yes
27	2000	2.5	0.5	10	0V	Yes

As can be seen, there is some slight duplication, resulting in an effective total of 22 gains. There are also a further 9 ranges based on the 100 to 500 mV/V ranges with the x10 link, which overlap ranges 10 to 18.

If a fine zero control is not added (P.T.O.) the coarse zeroes will not normally be used. However, if required, these are operated by linking the appropriate pin or pins (Z1, Z2, Z3, ZP) to the following nominal zero offsets:

Figure 10.

	Fine gain adjust linked to		
	DC Output	Nothing	0V
Z1	1.5 V	2.3 V	4.5 V
Z2	3.0 V	4.5 V	9.0 V
Z3	-5.5 V	-8.3 V	-16.5 V
ZP	2.0 V	3.0 V	6.0 V

These offsets are additive, for instance if Z1 and Z2 are both linked it will give zero offsets of 4.5, 6.8 and 13.5 V.

With no external components, the filter will behave as shown in the electrical specification, that is with a cut off frequency of 500 Hz.

If required, a fine gain control and fine zero control can be added, or other fixed gain band zero settings can be obtained by manipulating the gain select and zero select pins with external resistors. If other input impedances are required, an appropriate resistor can be wired in parallel with the input to reduce its resistance

Sample circuits

Figure 11. Basic circuit for LVDT, for a 5 VDC output for a 500 mV/V transducer, frequency 5 kHz.

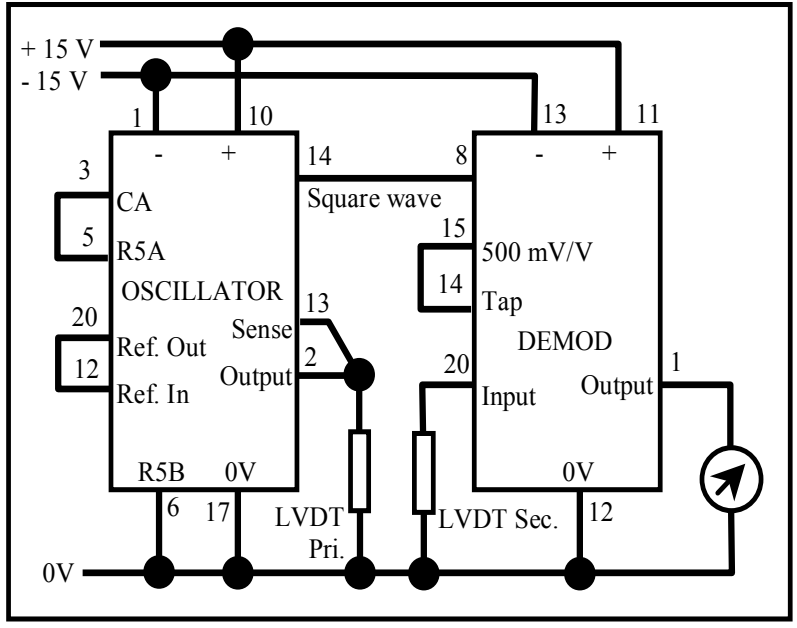

Figure 12. Circuit for LVDT with fine gain and zero adjust, sensitivity range 2.5 to 7.5 mV/V

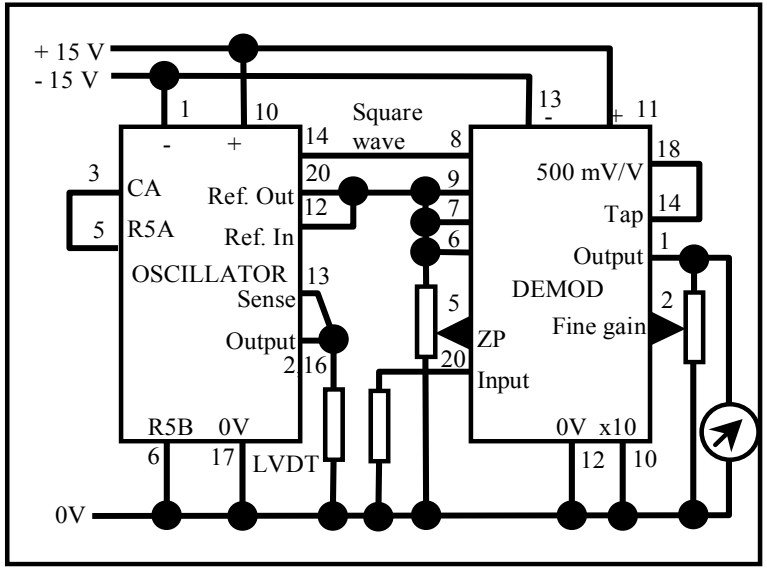

A two channel configuration can be achieved as Figure 13. This is by duplicating the demodulator circuit. The two LVDT primaries are wired in parallel and the secondaries each feed their own demodulator, the square wave being fed to both.

Earth Layout

Good earth layout is essential to avoid problems such as the demodulator output ripple being affected by oscillator loading.

An ideal layout is shown in Figure 13.

