Strain-gauge controllers

LED strain-gauge controllers	For strain-gauge inputs (AC+DC)	Codix 566



The process controller Codix 566 with totaliser function displays measured values from all common strain-gauge inputs in high resolution. In addition it can monitor and control 2 limit values.

These fast displays set new standards when it comes to user friendliness. Their easy-to-read 14-segment LED display, easy-to-understand running help texts and a practical quick-start guide eliminate the need to wade through time-consuming full instruction manuals.

With optional analogue output.

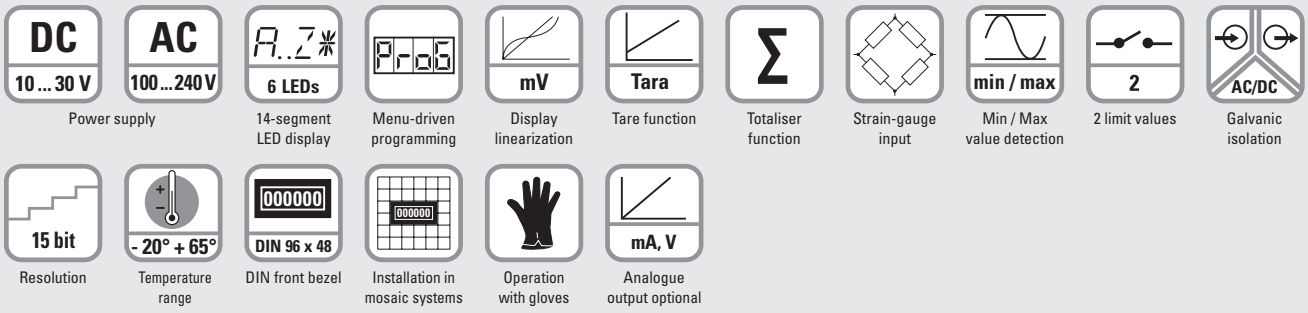

User-friendly

- Practical quick-start guide for setting the parameters and operating the device
- Help text as running text
- Easy-to-read 14-segment LED, 6-digit display, 14 mm high
- Simple programming via 4 keys on the front
- One front key as well as 2 additional inputs can be programmed for specific applications
- Customer-specific characteristic (linearization) curve via 12 control points for all measurement signal inputs
- MIN/MAX memory function, individually resettable

Powerful

- Sampling rate of 10 readings per second
- Application-specific characteristic curves via 12 measurement points
- Manual totaliser function for totalising the measured values. Can be reset separately.
- 2 relay outputs (changeover contacts) for limit monitoring with hysteresis and ON/OFF delay function for current measured or totaliser values
- Analogue output for the current measured value, MIN-value, MAX-value or totalizer value
- Auxiliary sensor power supply 10 V DC / 30 mA for powering 350 Ω bridges
- Inputs and outputs galvanically isolated
- Digital filter (first-order) for smoothing display fluctuation with unstable input signals
- Tare function

Order code

6.56 6 . 0 1 0 . X 0 X
(a) (b) (c) (d)

a *Input type*
6 = Strain-gauge inputs [1)]

b *Outputs*
0 = relays [1)]

c *Power supply*
0 = 100 ... 240 V AC, ± 10% [1)]
3 = 10 ... 30 V DC [1)]

d *Further outputs (optional)*
0 = none [1)]
9 = analogue output [1)]
(only for DC version)

Delivery specification:
- Process device
- Mounting clip
- Gasket
- Instruction manual, multilingual
- 1 sheet of self-adhesive symbols
- Quick-start guide

Practical quick-start guide for setting the parameters and operating the device.

The guide can be affixed directly to the front of the unit and can be removed and re-applied as required.



[1)] Stock types

© Fritz Kübler GmbH, subject to errors and changes. 03/2014

LED strain-gauge controllers | For strain-gauge inputs (AC+DC) | Codix 566

Accessories	Dimensions in mm [inch]		Order-No.
Mounting frame with cut-out 92 x 45 [3.62 x 1.77]	For snap-on mounting on 35 [1.38] top-hat DIN rail, for counters 96 x 48 [3.74 x 1.89]	grey	**G300005**

Suitable gaskets as well as further accessories can be found in the accessories section or in the accessories area of our website at: www.kuebler.com/accessories.

Technical data

General technical data

Display	6-digit, 14 segment LED
Digit height	14 mm [0.55"]
Display range	-199999 … 999999, with leading zero blanking
Data retention	> 10 years, EEPROM
Operation	5 keys
Operating temperature (non-condensing)	-20°C ... +65°C [-4°F ... +149°F]
Storage temperature	-25°C ... +75°C [-13°F ... +167°F]
Relative humidity (non-condensing)	R.H. 93 % at +40°C [+104°F]
Altitude	up to 2000 m [6562']

Mechanical characteristics

Housing		Panel mount housing to DIN 43700, RAL 7021
Dimensions		96 x 48 x 102 mm [3.78 x 1.89 x 4.02"]
Panel cut-out		92 +0.8 x 45 +0.6 mm [3.62 +0.032 x 1.77 +0.024"]
Installation depth		approx. 92 mm [3.62"] incl. terminals
Weight	with analogue output	approx. 180 g [6.34 oz] 200 g [7.06 oz]
Protection		IP65 (front side)
Housing material		Polycarbonate UL94 V-2
Vibration resistance	acc. to EN 60068-2-6	10 - 55 Hz / 1 mm / XYZ 30 min in each direction
Shock resistance	acc. to EN 60068-2-27	100G / XYZ 3 times in each direction
	acc. to EN 60068-2-29	10G / 6 ms / XYZ 2000 times in each direction

Connections

Power supply and outputs	Plug-in screw terminal, 8-pin, RM 5.00, core ø max. 2.5 mm² [AWG 13]
Signal and control inputs	Plug-in screw terminal, 9-pin, RM 3.50, core ø max. 1.5 mm² [AWG 15]

Electrical characteristics

Power supply	AC supply	100 ... 240 V AC / max. 9 VA 50 / 60 Hz, tolerance ±10% ext. fuse protection: T 0.1 A
	DC supply	10 ... 30 V DC / max. 3.8 W with galvanic isolation and reverse polarity protection ext. fuse protection: T 0.4 A
Mains hum suppression		50 Hz or 60 Hz programmable
Sensor power supply	AC supply	24 V DC ±15 %, 30 mA 10 V DC ± 1%, 30 mA
	DC supply	10 V DC ± 1%, 30 mA
EMC	Emitted interference Immunity to interference	EN 55011 class B EN 61000-6-2 with shielded signal and control cables
Device safety	Designed to Protection class Application area Overvoltage category	EN 61010 part 1 2 (front side) Pollution level 2 II
UL approval		File No.: E128604

Control inputs MPI 1 / MPI 2

Quantity		2 optocouplers
Function		programmable
Switching levels	LOW HIGH	< 2 V > 4 V (max. 30 V)
Pulse length		> 100 ms

Strain-gauge measuring signal inputs

Sampling rate	10 readings/sec
Input resistance	1 MΩ
Max. measuring signal range	approx. ± 35 mV
Max. voltage	± 10 V

Sensitivity ranges: 3.3 – 3.0 – 2.0 mV / V

Resolution	± 15 bit
Measuring accuracy at 23°C (% of range)	typ. 0.05 % / max. ≤ 0.1 %
Temperature drift	< 100 ppm/$K_{Ambient}$

Sensitivity ranges: 1.5 – 1.0 mV / V

Resolution	± 14 bit
Measuring accuracy at 23°C (% of range)	typ. 0.1 % / max. ≤ 0.2 %
Temperature drift	< 100 ppm/$K_{Ambient}$

© Fritz Kübler GmbH, subject to errors and changes. 03/2014

LED strain-gauge controllers | For strain-gauge inputs (AC+DC) | Codix 566

Alarm outputs		
Relays		changeover contacts
Switching voltage	max. min.	250 V AC / 125 V DC 5 V AC / 5 V DC
Switching current	max. min.	5 A AC / 5 A DC 10 mA DC
Switching capacity	max.	1250 VA / 150 W
Pull-in time		approx. 10 ms

Analogue output (optional - only for DC version)		
Output ranges		0 (4) ... 20 mA / 0 (2) ... 10 V
Load	current output voltage output	≤ 500 Ω ≥ 2000 Ω
Resolution		15 bit
Update time (basic device measuring rate)		100 ms
Temperature drift		≤ 100 ppm/$K_{Ambient}$
Accuracy		± 0.1% of the output range high value
Output ripple		≤ 10 mV
Isolation voltage		500 V AC for 1 minute or 1 kV DC for 1 second

Terminal assignment

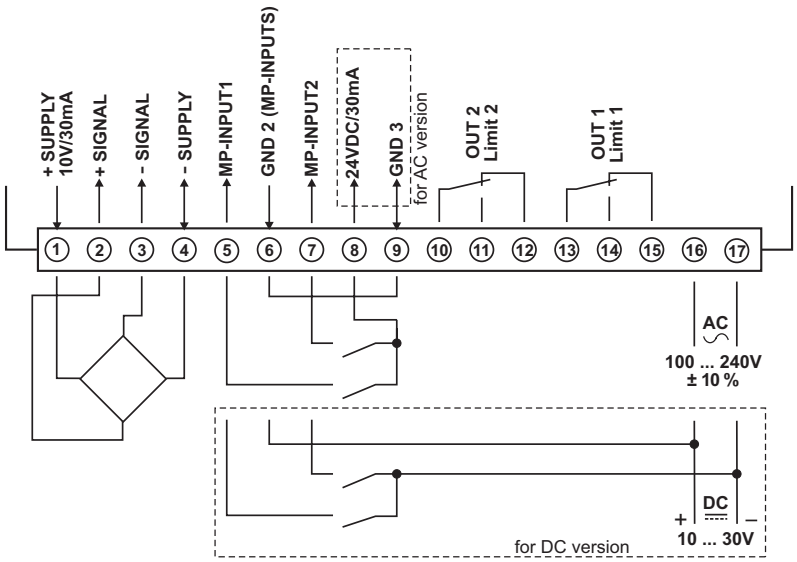

Rear side view

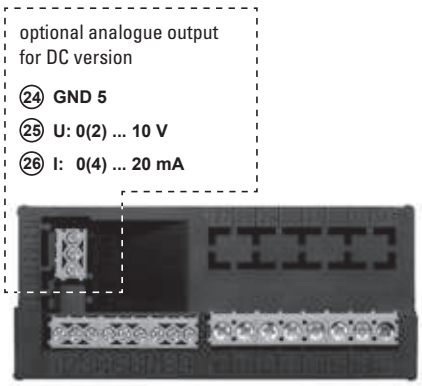

© Fritz Kübler GmbH, subject to errors and changes. 03/2014

LED strain-gauge controllers | For strain-gauge inputs (AC+DC) | Codix 566

Block diagram

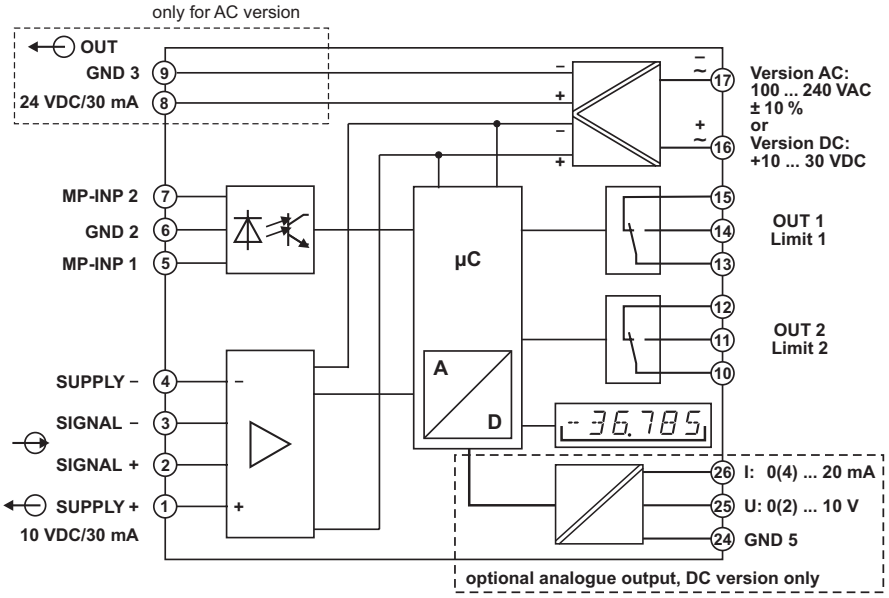

Dimensions

Dimensions in mm [inch]

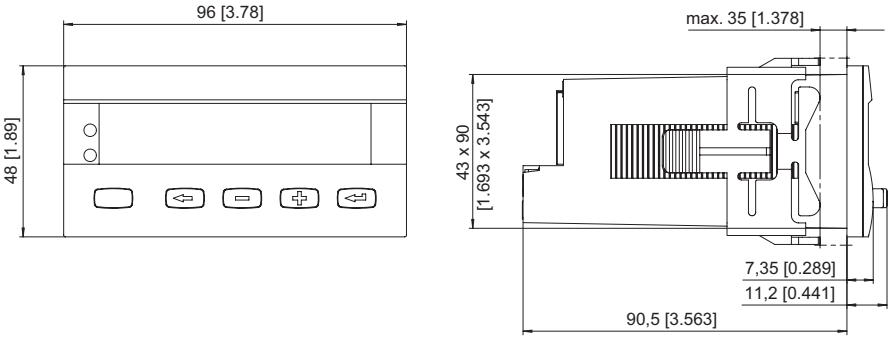

Panel cut-out
92 $^{+0.8}$ x 45 $^{+0.6}$
[3.62 $^{+0.032}$ x 1.77 $^{+0.024}$]

© Fritz Kübler GmbH, subject to errors and changes. 03/2014