PG2734

Flush pressure sensor with analogue display

PG-010KREA01-MFRKG/US/ /P

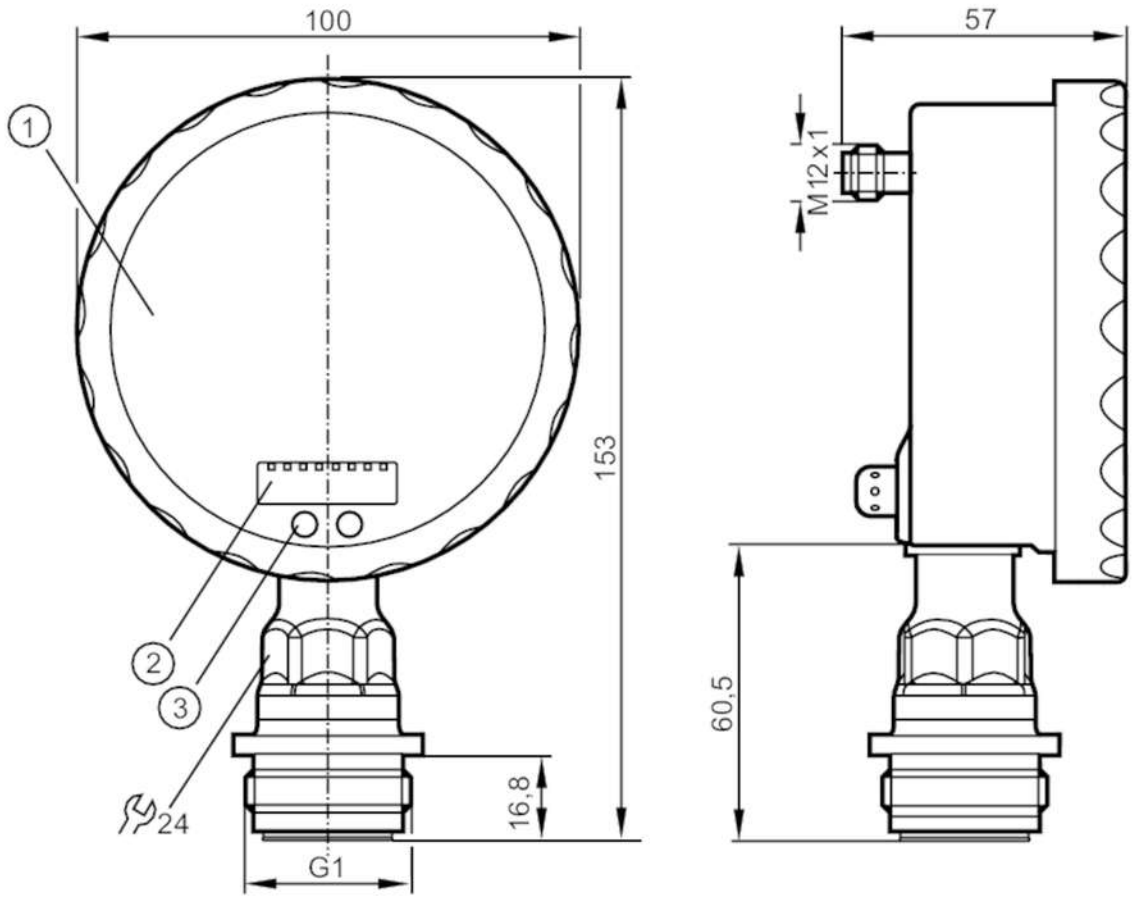

1 analogue display
2 alphanumeric display 4-digit
3 sensor field (programming button)

Product characteristics			
Number of inputs and outputs		Number of digital outputs: 1; Number of analogue outputs: 1	
Measuring range		-100...1000 kPa	-0.1...1 MPa
Process connection		threaded connection G 1 external thread Aseptoflex Vario	
Application			
Special feature		Gold-plated contacts	
Application		flush mountable for the food and beverage industry	
Media		viscous media and liquids with suspended particles; liquids and gases	
Medium temperature	[°C]	-25...125; (145 max. 1h)	
Min. bursting pressure		15000 kPa	15 MPa
Pressure rating		5000 kPa	5 MPa
Type of pressure		relative pressure; vacuum	
No dead space		yes	
MAWP (for applications according to CRN)	[bar]	50	

PG2734

Flush pressure sensor with analogue display

PG-010KREA01-MFRKG/US/ /P

Electrical data			
Operating voltage	[V]	18...32 DC	
Current consumption	[mA]	< 70; (24 V)	
Min. insulation resistance	[MΩ]	100; (500 V DC)	
Protection class		III	
Reverse polarity protection		yes	
Power-on delay time	[s]	6	
Integrated watchdog		yes	
Inputs / outputs			
Number of inputs and outputs		Number of digital outputs: 1; Number of analogue outputs: 1	
Outputs			
Total number of outputs		2	
Output signal		switching signal; analogue signal; (configurable)	
Electrical design		PNP/NPN	
Number of digital outputs		1	
Output function		normally open / normally closed; (parameterisable)	
Max. voltage drop switching output DC	[V]	2	
Permanent current rating of switching output DC	[mA]	250	
Switching frequency DC	[Hz]	50	
Number of analogue outputs		1	
Analogue current output	[mA]	4...20, invertible; (scalable)	
Max. load	[Ω]	(Ub - 10 V) / 20 mA	
Short-circuit protection		yes	
Type of short-circuit protection		pulsed	
Overload protection		yes	
Measuring/setting range			
Measuring range		-100...1000 kPa	-0.1...1 MPa
Set point SP	[kPa]	-98...1600	
Reset point rP	[kPa]	-100...1598	
Analogue start point	[kPa]	-100...1350	
Analogue end point	[kPa]	150...1600	
In steps of	[kPa]	1	
Accuracy / deviations			
Switch point accuracy	[% of the span]	< ± 0,2; (Turn down 1:1)	
Repeatability	[% of the span]	< ± 0,1; (with temperature fluctuations < 10 K; Turn down 1:1)	
Characteristics deviation	[% of the span]	< ± 0,2; (Turn down 1:1 , linearity, incl. hysteresis and repeatability , limit value setting to DIN EN IEC 62828-1)	
Linearity deviation	[% of the span]	< ± 0,15; (Turn down 1:1)	
Hysteresis deviation	[% of the span]	< ± 0,15; (Turn down 1:1)	

PG2734

Flush pressure sensor with analogue display

PG-010KREA01-MFRKG/US/ /P

Long-term stability [% of the span]		< ± 0,1; (Turn down 1:1; per year)
Temperature coefficient zero point [% of the span / 10 K]		< ± 0,05; (0...70 °C)
Temperature coefficient span [% of the span / 10 K]		< ± 0,15; (0...70 °C)
Response times		
Response time	[ms]	< 10
Damping process value dAP	[s]	0.01...30
Damping for the analogue output dAA	[s]	0.01...30
Step response time analogue output	[ms]	25
Operating conditions		
Ambient temperature	[°C]	-25...80
Storage temperature	[°C]	-40...100
Protection		IP 67; IP 69K
Tests / approvals		
EMC	EN 61000-4-2 ESD	4 kV CD / 8 kV AD
	EN 61000-4-3 HF radiated	10 V/m
	EN 61000-4-4 Burst	2 kV
	EN 61000-4-5 Surge	0,5/1 kV
	EN 61000-4-6 HF conducted	10 V
Shock resistance	DIN IEC 68-2-27	50 g (11 ms)
Vibration resistance	DIN IEC 68-2-6	20 g (10...2000 Hz)
MTTF	[years]	100
Note on approval		factory certificate available as download at www.factory-certificate.ifm
Mechanical data		
Weight	[g]	524
Dimensions	[mm]	153 x 100 x 57
Materials		stainless steel (316L/1.4404); PA; FKM; PTFE; viewing glass: laminated safety glass 4 mm
Materials (wetted parts)		ceramics (99.9 % Al2O3); stainless steel (316L/1.4435); surface characteristics: Ra < 0,4 / Rz 4; PTFE
Min. pressure cycles		100 million
Process connection		threaded connection G 1 external thread Aseptoflex Vario
Displays / operating elements		
Display	Display unit	2 x LED, green
	switching status	LED, yellow
	switch points	LED ring, red
	function display	alphanumeric display, red 4-digit
	measured values	analogue display, 0...350° rotatable, pointer not visible when unit disconnected
	measured values	alphanumeric display, red 4-digit
Extended display range (max.)	1600 kPa	1.6 MPa

PG2734

Flush pressure sensor with analogue display

PG-010KREA01-MFRKG/US/ /P

Remarks	
Remarks	characteristics deviation in the extended display range: 1.5 % of the span
	switch point accuracy in the extended display range: 1.5 % of the span
Pack quantity	1 pcs.

Electrical connection

Connector: 1 x M12; coding: A; Contacts: gold-plated



Connection

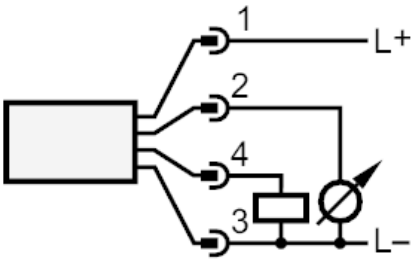

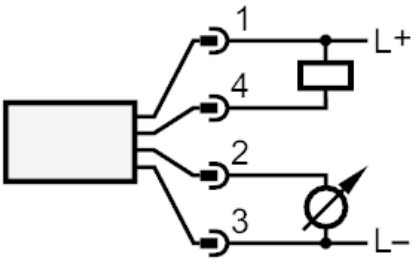

OUT1	switching output
OUT2	analogue output