

Visual Signals - Industrial
LIGHT EMITTING DIODE **BEACONS**

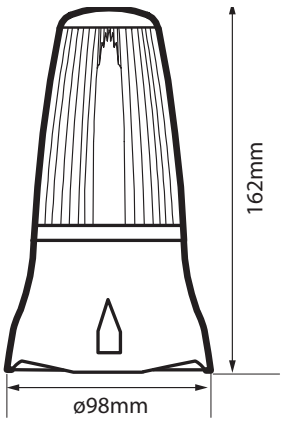

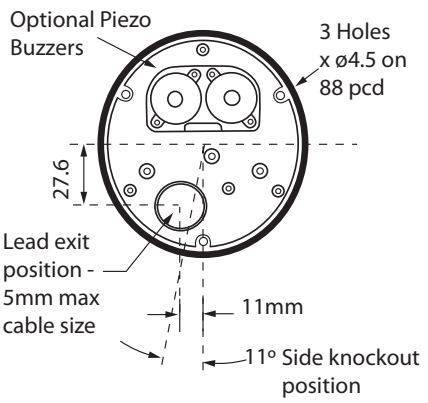

Industrial LED Multi Functional Beacons > **LEDD & LEDA 125 Series**

Product overview

The LEDD and LEDA125 series are suitable for security, process control & industrial applications, where low maintenance and long life are the pre-requisite requirement.

These beacons offer a three stage alarm option, selected by a jumper link on the PCB:
1. Continuous mode
2. Flashing mode at 1Hz
3. Flashing mode at 2Hz

An advantage of the Continuous mode is that it can be controlled via a remote source (ie. control panel / plc etc) offering the potential of remote flash option. The design for the DC unit allows for termination inside the enclosure via an M12 sealing grommet in the base. The AC units are supplied with a 1 metre flying lead.

The LEDA version incorporates two piezo buzzers situated in the base of the unit that are synchronised to the light mode (the buzzers can be controlled separately of the light on the DC version Only) offering a combined audible & visual warning device.

LEDD & LEDA 125 Series > Ordering Information

Code No:	Voltage:	Light Source:	Current:				
			01	02	03	04	05
LEDD125-02	24v Dc ---	48 LEDs	150 mA	170 mA	170 mA	170 mA	170 mA
LEDD125-03	115v Ac ~	48 LEDs	60 mA	60 mA	60 mA	60 mA	60 mA
LEDD125-04	230v Ac ~	48 LEDs	40 mA	40 mA	40 mA	40 mA	40 mA
For Audible Option							
LEDA125-02	24v Dc ---	48 LEDs	155 mA	175 mA	175 mA	175 mA	175 mA
LEDA125-03	115v Ac ~	48 LEDs	60 mA	60 mA	60 mA	60 mA	60 mA
LEDA125-04	230v Ac ~	48 LEDs	40 mA	40 mA	40 mA	40 mA	40 mA

Note: The technical specification listed above will only come into standard manufacture in the 2nd quarter of 2013.
For current standard specification for these beacons go to our website.

ADD THE FOLLOWING LENS CODES TO THE PRODUCT WHEN ORDERING 01 02 03 04 05

Features

- Continuously rated
- LED long life and extra bright
- Suitable for surface or wall mounting
- Optional wall bracket & guard available - see accessories
- 3 point fix
- 360º light output around the vertical axis.
- Dustproof and Weatherproof

Material

UV Stable Polycarbonate Lens
UV Stable ABS Plastic Base

Kg 0.57 Ac 0.33 Dc | 50/60 **Hz** | **ºC** -20+45 | **IP** 65 | **FPM** 60/120 | **dB** 90

APPROVALS and CONFORMITIES

RoHS

INDUSTRIAL **FIRE**