E43900

Mounting adapter for capacitive sensors

MOUNTING ADAPTER G3/4",POM

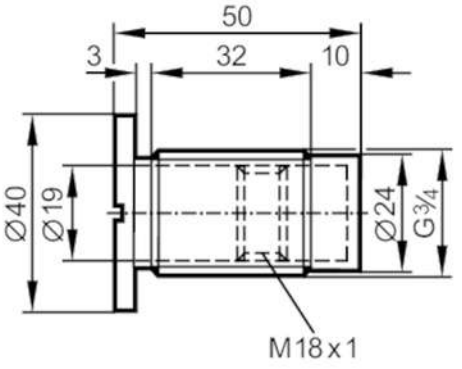

Application		
Pressure rating	[bar]	8
Operating conditions		
Ambient temperature	[°C]	-25...80
Mechanical data		
Weight	[g]	22
Dimensions	[mm]	G 3/4 / L = 50
Thread designation		G 3/4
Materials		Adapter: POM
Tightening torque	[Nm]	5
Sensor connection		threaded connection M18 x 1 internal thread
Process connection		threaded connection G 3/4 external thread
Remarks		
Pack quantity		1 pcs.