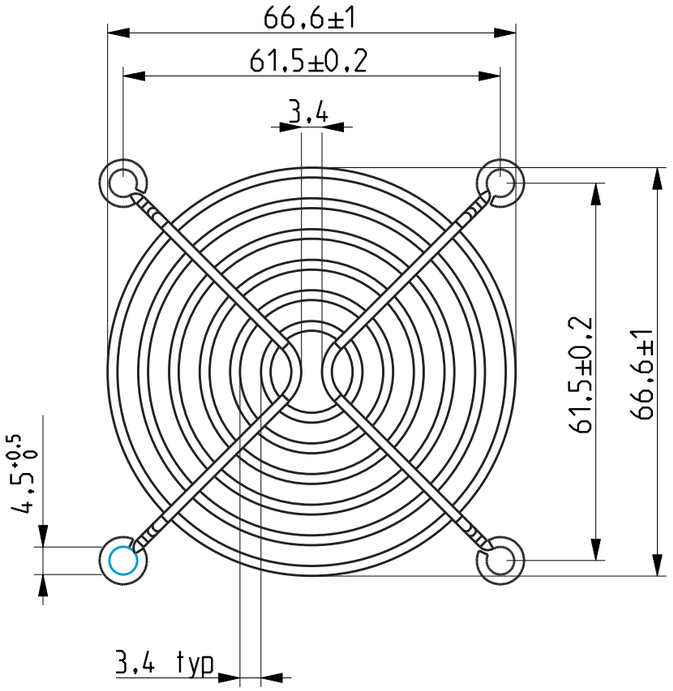

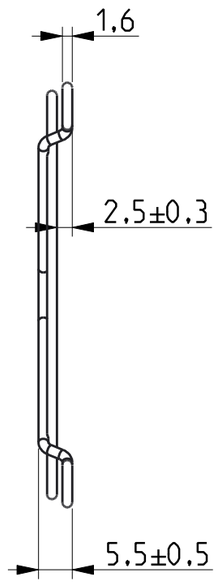

	DO NOT SCALE IF IN DOUBT PLEASE ASK	Dims in mm Scale : 1.000			
	Original A3 © 2007 3rd Angle Projection	Drwn by : AS Chkd by : Appd by :	A	First Issue	26-May-17
			Issue	DCR	Date

Material :
Steel Wire 1.6mm thk

Finish : Zinc or nickel plated

ebm-papst UK Ltd.

CHELMSFORD BUSINESS PARK CHELMSFORD ESSEX CM2 5EZ

Guard, Fan Size 70 x 70

LZ70(CP)

Mass : &unitsmass_kg kg -- Analysis Matl : &analysis_material -- Model Name : 700_GUARD_GRILLE --- Drawing Name : 700_GUARD_GRILLE

Sheet 1 of 1