efector500

PK7522

PK-100-SFG14-QSPKG/US/ /W

Pressure sensors

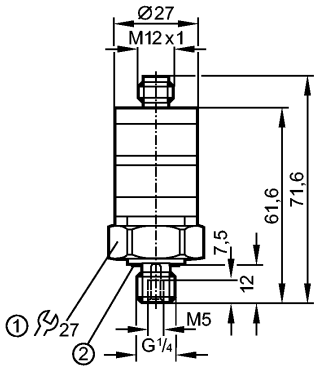

1: tightening torque 25 Nm
2: sealing FPM / DIN 3869-14

Made in Germany

Product characteristics			
Electronic pressure monitor			
Connector			
Process connection: G¼ A / M5 I			
2 switching outputs			
Measuring range: 0...100 bar / 0...1450 psi			
Application			
Application		Type of pressure: relative pressure Liquids and gases	
Pressure rating		200 bar	2900 psi
Bursting pressure min.		1000 bar	14500 psi
Medium temperature	[°C]	-25...80	
Electrical data			
Electrical design		DC PNP	
Operating voltage	[V]	9.6...32 DC	
Current consumption	[mA]	< 25	
Insulation resistance	[MΩ]	> 100 (500 V DC)	
Protection class		III	
Reverse polarity protection		yes	
Outputs			
Output		2 switching outputs	
Output function		2 x normally open	
Current rating	[mA]	500	
Voltage drop	[V]	< 2	
Short-circuit protection		pulsed	
Overload protection		yes	
Switching frequency	[Hz]	100	
Measuring / setting range			
Measuring range		0...100 bar	0...1450 psi
Setting range			
Set point, SP		3...100 bar	45...1450 psi
Hysteresis		2 bar	29 psi
Accuracy / deviations			

PK7522

PK-100-SFG14-QSPKG/US/ /W

Deviations (% of value of measuring range)		
Switch point accuracy		< ± 2.5 *)
Characteristics deviation		< ± 1.5 (BFSL) / < ± 2.5 (LS) **)
Repeatability		< ± 0.5
Temperature drift (/ 10 K)		< ± 0.5
in the temperature range	[°C]	0...80
Software / programming		
Adjustment of the switch point		setting rings
Environment		
Ambient temperature	[°C]	-25...80
Storage temperature	[°C]	-40...100
Protection		IP 67
Tests / approvals		
EMC		EN 61000-4-2 ESD: 4 kV CD / 8 kV AD EN 61000-4-3 HF radiated: 10 V/m EN 61000-4-4 Burst: 2 kV EN 61000-4-6 HF conducted: 10 V
Shock resistance		DIN IEC 68-2-27: 50 g (11 ms)
Vibration resistance		DIN IEC 68-2-6: 20 g (10...2000 Hz)
MTTF	[Years]	513
Mechanical data		
Process connection		G¼ A / M5 I
Materials (wetted parts)		stainless steel 316L / 1.4404; FPM (Viton)
Housing materials		PBT (Pocan); PC (Makrolon); FPM (Viton); stainless steel 316L / 1.4404
Switching cycles min.		50 million
Weight	[kg]	0.093
Displays / operating elements		
Display		Switching status 2 x LED yellow
Electrical connection		
Connection		M12 connector

Wiring



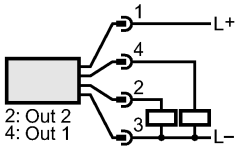

Remarks		
Remarks		*) Setting accuracy **) BFSL = Best Fit Straight Line / LS = Limit Value Setting
Pack quantity	[piece]	1