TA2537

Temperature transmitter

TA-100CLER12- - /US

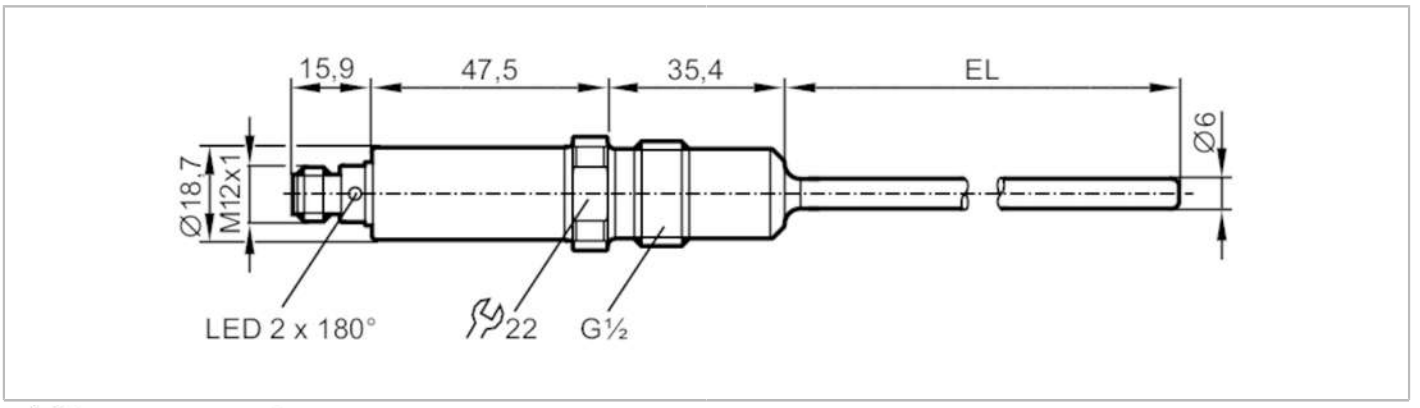

Product characteristics			
Number of inputs and outputs		Number of analogue outputs: 1	
Measuring range	[°C]	-50...200	
Communication interface		IO-Link	
Process connection		threaded connection G 1/2 external thread sealing cone	
Installation length EL	[mm]	100	
Application			
Measuring element		1 x Pt 1000; (to DIN EN 60751, class A)	
Media		liquids and gases	
Pressure rating		160 bar	16 MPa
Vacuum resistance		-1000 mbar	-0.1 MPa
MAWP (for applications according to CRN)	[bar]	160	
Electrical data			
Operating voltage	[V]	18...32 DC; ("supply class 2" to cULus)	
Current consumption	[mA]	< 50	
Protection class		III	
Reverse polarity protection		yes	
Power-on delay time	[s]	2	
Inputs / outputs			
Number of inputs and outputs		Number of analogue outputs: 1	
Outputs			
Total number of outputs		1	
Output signal		analogue signal; IO-Link; (configurable)	
Number of analogue outputs		1	
Analogue current output	[mA]	4...20	
Max. load	[Ω]	250; ((18...19 V); 19...32 V: 300 Ω)	
Short-circuit protection		yes	
Overload protection		yes	
Measuring/setting range			
Probe length L	[mm]	100	
Measuring range	[°C]	-50...200	

TA2537

Temperature transmitter

TA-100CLER12- - /US

Factory setting		0...100 °C	
Resolution			
Resolution of analogue output	[K]	0.04	
Accuracy / deviations			
Precision analogue output	[K]	± 0,3 + (± 0,1 % MS)	
Temperature coefficient	[% of the span / 10 K]	0,1; (in case of deviation from the reference condition 25 ± 5 °C)	
Response times			
Dynamic response T05 / T09	[s]	< 0,5 / < 2	
Interfaces			
Communication interface		IO-Link	
Transmission type		COM2 (38,4 kBaud)	
IO-Link revision		1.1	
Operating conditions			
Ambient temperature	[°C]	-25...80	
Note on ambient temperature		at medium temperature: < 160 °C	
		-25...60 °C	
		at medium temperature: < 200 °C	
Storage temperature	[°C]	-40...100	
Protection		IP 67; IP 68; IP 69K	
Tests / approvals			
EMC		DIN EN 61000-6-2	
		DIN EN 61000-6-3	
Shock resistance		DIN IEC 68-2-27	50 g (11 ms)
Vibration resistance		DIN IEC 68-2-6	10 g (10...2000 Hz)
MTTF	[years]	334	
Note on approval		factory certificate available as download at www.factory-certificate.ifm	
UL approval		UL Approval no.	K002
Mechanical data			
Weight	[g]	230	
Housing		cylindrical	
Dimensions	[mm]	Ø 18.7 / L = 198.8	
Materials		stainless steel (316L/1.4404); PEI; FKM	
Materials (wetted parts)		stainless steel (316L/1.4404) electropolished	
Tightening torque	[Nm]	30...50	
Process connection		threaded connection G 1/2 external thread sealing cone	
Surface characteristics Ra/Rz of the wetted parts		Ra: < 0.8	
Probe diameter	[mm]	6	
Installation length EL	[mm]	100	
Remarks			
Remarks		MS = set measuring span	
		The values for accuracy apply to flowing water.	
Pack quantity		1 pcs.	

TA2537

Temperature transmitter

TA-100CLER12- - /US

Electrical connection

Connector: 1 x M12; coding: A

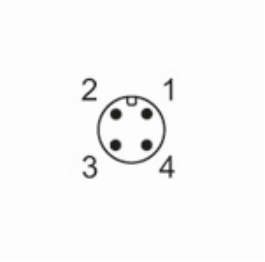

Connection

