ID9922

Inductive sensor

IDC2050BARKG/UP/US-100 RT

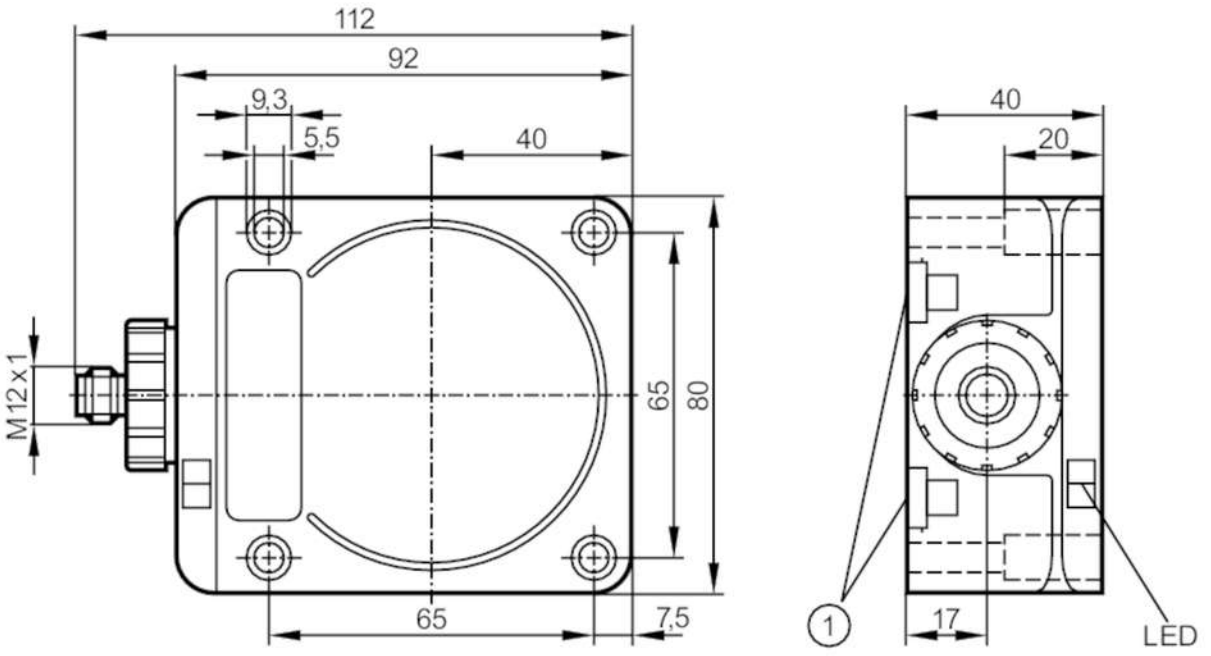

1 mounting on DIN rail

Product characteristics		
Electrical design		PNP/NPN
Output function		normally open
Sensing range	[mm]	50
Housing		rectangular
Dimensions	[mm]	92 x 80 x 40
Electrical data		
Operating voltage	[V]	10...55 DC
Protection class		II
Reverse polarity protection		yes
Outputs		
Electrical design		PNP/NPN
Output function		normally open
Max. voltage drop switching output DC	[V]	4.6
Minimum load current	[mA]	4
Max. leakage current	[mA]	0.6
Permanent current rating of switching output DC	[mA]	400
Switching frequency DC	[Hz]	90
Short-circuit protection		yes
Type of short-circuit protection		pulsed
Overload protection		yes

ID9922

Inductive sensor

IDC2050BARKG/UP/US-100 RT

Detection zone			
Sensing range	[mm]	50	
Operating distance	[mm]	0...40.5; (mounted flush with mild steel (ST37))	
Accuracy / deviations			
Correction factor		steel: 1 / stainless steel: 0.7 / brass: 0.4 / aluminium: 0.3 / copper: 0.2	
Hysteresis	[% of Sr]	3...20	
Switch point drift	[% of Sr]	-15...15	
Operating conditions			
Ambient temperature	[°C]	-25...70	
Protection		IP 67	
Tests / approvals			
EMC		EN 60947-5-2	
		EN 55011	class B
MTTF	[years]	1631	
Mechanical data			
Weight	[g]	399	
Housing		rectangular	
Mounting		flush mountable	
Type of mounting		rail; (TH35 (EN 60715))	
Dimensions	[mm]	92 x 80 x 40	
Materials		PPE; brass nickel-plated	
Displays / operating elements			
Display		switching status	1 x LED, red
Accessories			
Items supplied		sealing plug: 1	
Remarks			
Pack quantity		1 pcs.	
Electrical connection - plug			

Connector: 1 x M12; coding: A



ID9922

Inductive sensor

IDC2050BARKG/UP/US-100 **RT**

Connection

