DIRIS A*p*
Out 0/4 – 20 mA

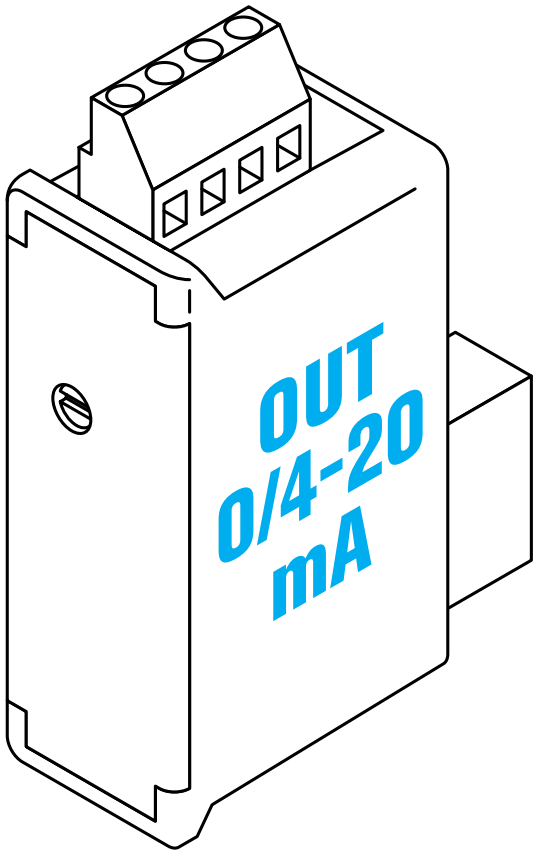

Industrial Switching & Protection Systems

Contents

PRELIMINARY OPERATIONS _____ p. 4
GENERAL INFORMATION _____ p. 4
INSTALLATION _____ p. 4
PROGRAMMING _____ p. 6
TECHNICAL CHARACTERISTICS _____ p. 9

PRELIMINARY OPERATIONS

NB:
For personnel and product safety please read the contents of these operating instructions carefully before connecting.

Check the following points as soon as you receive the Diris A*p* package:
- the packing is in good condition,
- the product has not been damaged during transit,
- the product reference number conforms to your order,
- the package contains the product fitted with a pull-out terminal block,
- operating instructions.

GENERAL INFORMATION

FUNCTIONS

This module provides 2 entirely configurable 0/4-20 mA analog outputs (threshold at 0 or 4 mA and threshold at 20 mA) on I1, I2, I3, In, U12, U23, U31,V1, V2, V3, ΣP, ΣQ, ΣS, ΣPF and F. Up to a maximum of 2 modules, that is 4 analog outputs installed on one Diris Ap.

INSTALLATION

The module is fitted onto the back of the DIRIS Ap in one of the 4 positions provided.

CONNECTION

⚠ The DIRIS Ap must be switched off

1

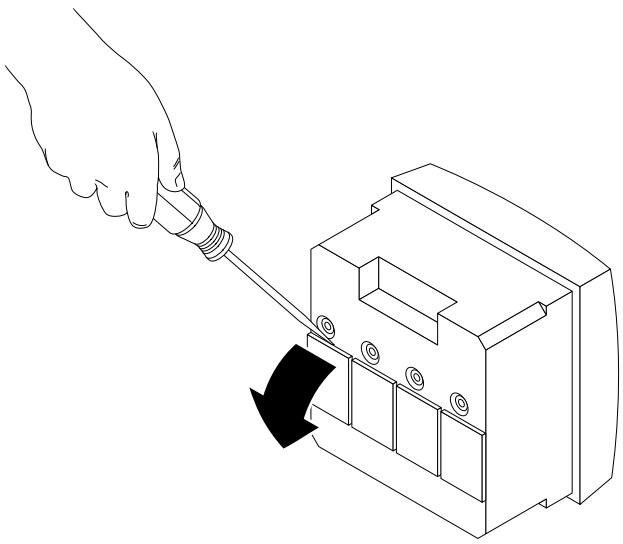

DIRIS 342 A

2 Fix the module in one of the four positions.

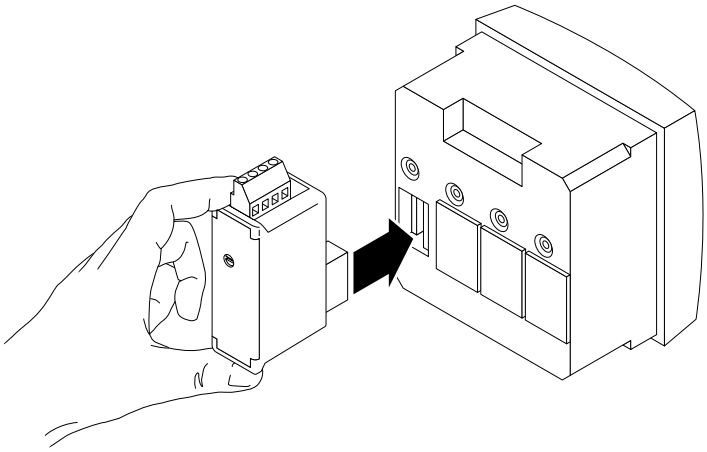

DIRIS 343 A

3

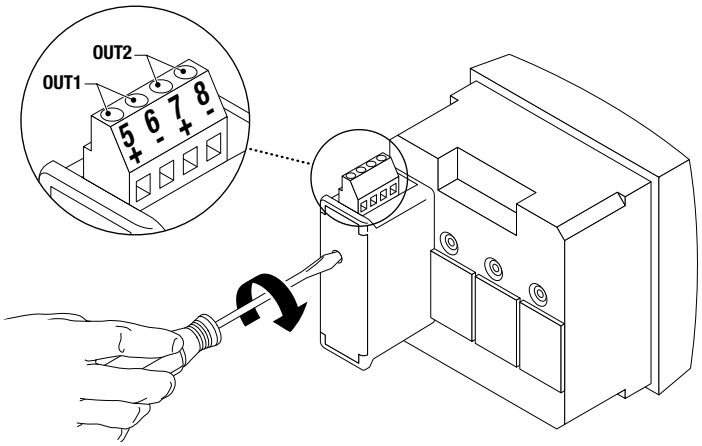

DIRIS 435 A

4 When using the four outputs, the two modules must be installed in **the two left-hand positions as shown.**

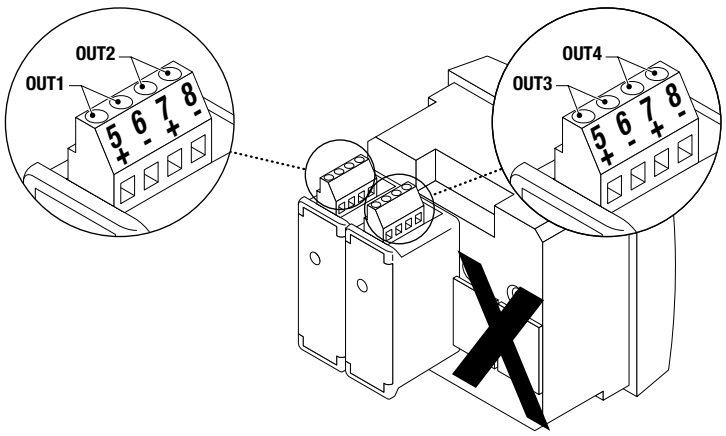

DIRIS 436 B

PROGRAMMING

1 PROGRAMMING THE N° 1 ANALOG OUTPUT TYPE (OUt 1 20 MA TYPE)

NB: *The type default setting is 4-20 mA. If you want this setting, press ▼. You will pass to number 1 analog output allocation programming (OUt 1 20 MA PAR). If not, proceed as follows:*

KEYS	INSTRUCTIONS	DISPLAY	COMMENT
▶	Press once		To display flashing 4-20 mA.
▲	Press once		To select 0-20 mA. Press again for 4 – 20 mA.
↵	Press once		Confirm type. Press ▼ to programme its allocation

2 PROGRAMMING OF THE N° 1 ANALOG OUTPUT ALLOCATION (OUt 1 20 MA PAR)

NB: *The allocation default setting is I1. If you want this allocation, press ▼. You will pass to value at 0 or 4 mA programming (OUt 1 20 MA LV). If not, proceed as follows:*

KEYS	INSTRUCTIONS	DISPLAY	COMMENT
▶	Press once		To display flashing I1.
▲	Press once		Press again for: I3, In, U12, U23, U31, V1, V2, V3, ΣP, ΣQ, ΣS, ΣPF, F, I1, I2.
	or		
▼	Press once		Press again for: F, ΣS, ΣQ, ΣP, V3, V2, V1, U31, U23, U12, In, I3, I2, I1.
↵	Press once		Confirm size. Press ▼ to programme the value at 0 or 4 mA (LV).

3 PROGRAMMING OF THE N° 1 ANALOG OUTPUT VALUE AT 0 OR 4 mA (OUt 1 20 MA LV)

NB: *The type default setting is 0 mA (LV 0000). If you want this setting, press ▼. You will pass to value at 20 mA programming (OUt 1 0 MA HV). If not, proceed as follows:*

KEYS	INSTRUCTIONS	DISPLAY	COMMENT
▶	Press once	OUt 1 20mA PROG LV 0000 / A	Press as many times as necessary to move to the right or on ◀ to move to the left.

Press on ▼ to decrement or on ▲ to increment selected digit value.
Press once on ⮐ to confirm value.
Press once on ▼ to pass to value at 20 mA programming (OUt 1 20 MA HV).

NB: *the first four digits correspond to the value in decimals and the sixth digit to the weight /, K (kilo) or M (Mega).*

Example: programming of 1000 kilo once entered in the OUt 1 20 MA LV menu

KEYS	INSTRUCTIONS	DISPLAY	COMMENT
▶	Press once	OUt 1 20mA PROG LV 0000 / A	To display flashing 1st digit.
▲	Press once	OUt 1 20mA PROG LV 1000 / A	To increment the 1st digit.
▶	Press four times	OUt 1 20mA PROG LV 1000 / A	To display flashing 5th digit.
▲	Press once	OUt 1 20mA PROG LV 1000 K A	Press again for : M, / and K

NB: *for ∑P, ∑Q, ∑S and ∑PF the lower threshold (LV) corresponds to the negative value (example : -1000 kW).*

⮐	Press once	OUt 1 20mA PROG LV 1000 K A	To confirm value . Press ▼ to programme the value at 20 mA (HV).

4 PROGRAMMING OF THE N° 1 ANALOG OUTPUT VALUE AT 20 mA (OUt 1 20 MA HV)

NB: *The type default setting is 0 mA (HV 0000). If you want this setting, press ▼. You will pass to type programming (OUt 2 20 MA TYPE). If not, proceed as follows:*

KEYS	INSTRUCTIONS	DISPLAY	COMMENT
▶	Press once		Press as many times as necessary to move to the right or on ◀ to move to the left.

Press ▼ to decrement or on ▲ to increment selected digit value.
Press once ⮐ to confirm value.
Press once ▼ to pass to analog output 2 type programming (OUt 1 20 MA TYPE).

NB: *the first four digits correspond to the value in decimals and the sixth digit to the weight /, K (kilo) or M (Mega).*

Example : programming of 2000 M once entered in the Out 1 20 mA HV

KEYS	INSTRUCTIONS	DISPLAY	COMMENT
▶	Press once		To display flashing 1st digit.
▲	Press once		To increment the 1st digit
▶	Press four times		To display flashing 5th digit.
▲	Press once		Press again for : M, / and K

NB: for ΣP, ΣQ, ΣS and ΣPF the upper threshold (HV) may correspond to the positive value (example : + 1000 kW).

⮐	Press once		To confirm value. Press ▼ to programme analog output 2 type (OUt 2 20 MA TYPE).

5 PROGRAMMING OF N° 2 ANALOG OUTPUT (OUt 2 20 MA TYPE)

Proceed as for number 1 analog output. If you do not wish to use it, press ▼ to return to network programming (Net) or to pass to number 3 analog output programming (if the 2nd 0/4 – 20 mA module is installed) or press for 3 seconds on **PROG** to quit programming.

6 PROGRAMMING OF N° 3 ANALOG OUTPUT (OUt 3 20 MA TYPE)

Proceed as for number 1 analog output. Number 3 output is present while installing a 2nd analog output module. If you do not wish to use it, press ▼ to pass to number 4 analog output programming (OUt 4 – 20 MA TYPE) or press for 3 seconds on **PROG** to quit programming.

7 PROGRAMMING OF N° 4 ANALOG OUTPUT (OUt 4 20 MA TYPE)

Proceed as for number 1 analog output. Number 4 output is present while installing a 2nd analog output module. If you do not wish to use it, press ▼ to return to network programming (Net) or press for 3 seconds on **PROG** to quit programming.

TECHNICAL CHARACTERISTICS

ANALOG OUTPUTS

Load resistance	0 to 600 Ohms
Response time	1 sec
Galvanic insulation	2.5 kV
Accuracy (full scale)	0.5 %

Réf. : 875 518B-GB - 10/01

HEAD OFFICE

SOCOMEC GROUP
Industrial Switching and Protection Systems
SOCOMEC S.A.
capital 11 407 400 €

R.C. Strasbourg 5484500 149 B
BP 10 - Rue de Westhouse
F-67235 Benfeld cedex
Tel. (33) 3 88 57 41 41 - Fax (33) 3 88 57 42 60

SALES MANAGEMENT DIVISION

SOCOMEC
95, rue Pierre grange
F-94132 Fontenay-sous-Bois Cedex
Tel. (33) 1 45 14 63 40 - Fax (33) 1 48 77 31 12

SOCOMEC
Industrial Switching & Protection Systems

This document is not contractual. SOCOMEC reserves the right to modify features without prior notice in view of continued improvements.