Drain Inspection Camera System 30M - 18MM

Operation Manual



SKU: TT-DC-30M-18

Please read the Operation Manual before using this tool

TRADETUFF

[INTRODUCTION]

The pipe inspection system is a powerful set of tools that helps you locate and diagnose problems in a pipeline system.
The system is widely used in inspections of sewer, central air conditioning, chimney, plumbing, building, cable pipe and pipe ventilation systems and other places.

[GENERAL SAFETY RULES]

Precautions

Read all safety warnings and instructions. Failure to follow warnings and instructions may result in electric shock, fire and/or serious injury.

1. Save this operation manual for future reference.
2. Do not operate this device in explosive atmospheres, such as in the presence of flammable liquids, gases, hazardous chemicals, superheated liquid or heavy dust. It may create sparks which may ignite the dust or fumes.
3. The camera head and the push cable are waterproof (when camera installed on rod cable); however, the keyboard and DVR inside the control box are not. Do not expose them to water or rain when the control box is open. This will increase the risk of electrical shock.
4. Avoid using the device in environments of extreme cold, heat or humidity as it may damage the device.
5. Do not drop or press hard on the device.
6. Always backup your data before inserting your SD memory card to this system. The manufacturer is not responsible for any data loss or damage on your SD memory card for any reason.
7. Do not disconnect the unit while recording or playing back. It may damage the unit and/or the SD memory card.
8. Only qualified person are allowed to repair this device. Service or maintenance performed by unqualified person could result in injury.
9. Do not use this device in places where there is high voltage equipment. The device doesn't contain high voltage protection and isolation.

[APPLICATION AND KNOW YOUR TOOL]

Application

Suitable for pipes at diameter of 25mm-200mm. Ability to go through 90° bends in pipe DN45mm(for 23mm camera with 5.2mm rod);and in pipe DN32mm(for 14mm camera with 4.8mm rod)and in pipe DN52mm(for 23mm camera with 6.8mm rod).

Know Your Tool

The pipe inspection system includes the following four main parts: Camera head, Cable reel, Frame and Toolbox((including DVR, control device, battery, keyboard).
The camera head includes high-light white LEDs and a highly scratch-resistant sapphire lens cover; this coupled with stainless steel housing allow the camera to withstand repeated hits in various pipes.
Flexible stainless steel spring and associated components make the camera head possible to go through bend pipes. Also the battery pack provides power supply for the system and the DVR monitor can record video and take photos.
The stable and open composite structure is easier to clean.

Camera Head

1. Sapphire Lens
2. PC lens
3. Stainless Steel Shell
4. Stainless Steel Spring
5. Camera O-ring
6. Gold Connecter



Figure 1. Camera Head

Cable Unit

1. Support Frame
2. Coil Wheel
3. Push Cable
4. Meter Component
5. Wire Clip
6. Toolbox Fixed Seat
7. Socket (connect to toolbox)
8. Guiding Wheel
9. Hook
10. Ball Lock Pin
11. Cable Connector (To Camera)
12. Cable Stop Housing
13. Camera Holder
14. Label
15. Soft Handle
16. Coil Fixing Plate
17. Connects Cables

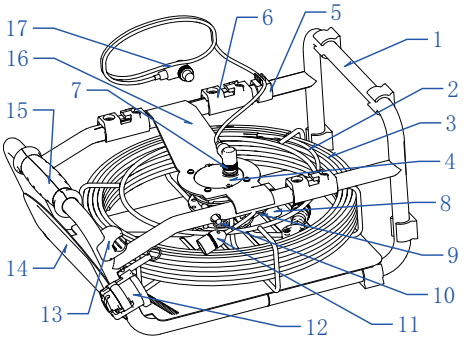

Figure 2. Cable Unit

Toolbox Unit

1. Sunshade
2. High-definition color LCD display
3. DC input
4. Wireless keyboard
5. Aviation socket
6. Toolbox lock
7. SD card slot
8. USB Slot
9. Membrane Switchs
10. Switch button
11. Photo shoot button
12. Start/stop recording
13. LED brightness
14. Image rotation
15. Confirmation/Pause
16. Select right/fast forward
17. Downward selection
18. Upward selection
19. Select left/rewind
20. PT/WT: reserve function
21. Playback mode
22. Image zoom/exit and return
23. Menu settings
24. Meter counter zero-set button
25. Charging and working indicator
26. Remote control receiver

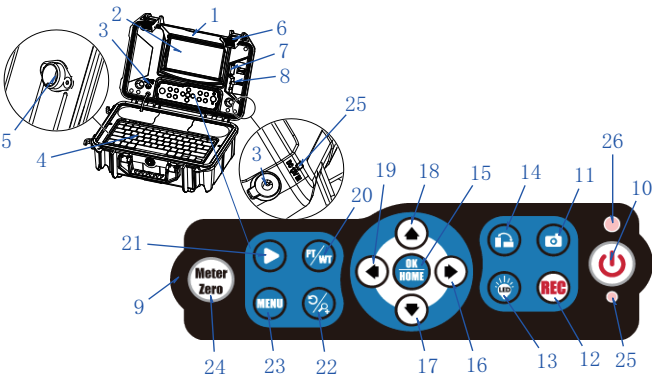

Figure 3. DVR and Toolbox

Remote control

1. Menu settings
2. Playback mode
3. Reserved function expansion
4. Image zoom/exit and return
5. Upward selection
6. Confirm/Pause
7. Select left/rewind
8. Select right/fast forward
9. Select downward
10. Image rotation
11. LED brightness
12. Start/stop recording
13. Photo shoot button

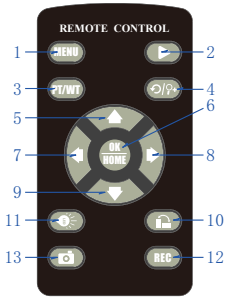

Figure 4. Remote Control

Package Contents

1. Panel with DVR
2. Wireless keyboard
3. Adapter
4. Car charger
5. Remote control
6. 46mm and 80mm skids(for 23mm camera)
7. 28mm skid and Hexagon Spanner (for 14mm/18mm camera)
8. Screw, nut and waterproof-ring(for 23mm camera) waterproof-ring(for 14mm/18mm camera)
9. Hexagon Spanner
10. Screw Driver
11. Operation manual
12. Camera Head
13. Support Frame
14. Coil Wheel
15. Connects Cables

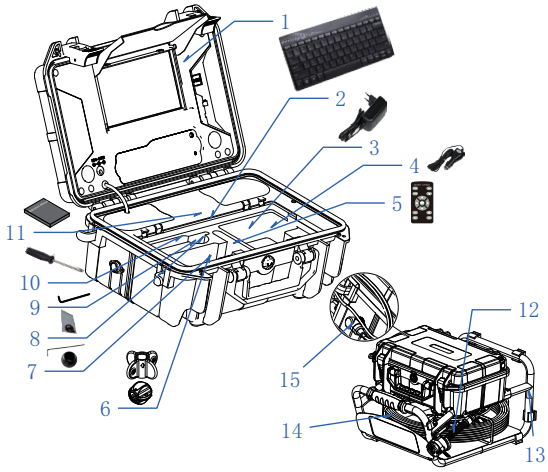

Figure 5. Package Contents

[DESCRIPTION SPECIFICATIONS AND STANDARD EQUIPMENT]

specifications

Type	Item	Parameter		
General	Operating Temperature	-10~50°C/+14~+122°F		
	Operating Humidity	30%RH~90%RH		
	Storage Temperature	-20~60°C/+4~+140°F		
	Power adapter	Input:100-240V AC, Output:12V DC 1500mA		
	MEAS.	55×43.5×34.5cm (LxWxH)		
	Weight	11.5-13.0 Kg(Approx)		
Camera		**Φ23mm camera head**	**Φ18mm camera head**	**Φ14mm camera head**
	Sensor	1/3" CMOS	1/3" CMOS	1/4" CMOS
	Resolution	AHD 1920×1080	AHD 1920×1080	648×488
	View Angle	130°(diagonal)	130°(diagonal)	90°(diagonal)
	Focus Distance	15cm (approx)	6cm (approx)	6-8cm (approx)
	Depth Of Field	20cm(approx)	10cm(approx)	20cm(approx)
	Camera Size	Φ23mm×51mm (Main body)	Φ18mm×29mm (Main body)	Φ14mm×21mm (Main body)
	Camera Length	155mm	135mm	125mm
	Front Lens	Sapphire	Sapphire	Sapphire
	Shell Material	304#Stainless Steel	304#Stainless Steel	304#Stainless Steel
	Lighting	Built-in 15×LED (White)	Built-in 9×LED (White)	Built-in 4×LED (White)
	Water-Proof	20m water (Camera fix on Cable)	20m water (Camera fix on Cable)	10m water (Camera fix on Cable)
	Power Supply	DC9~15V	DC9~15V	DC9~15V
	Current Consume	55mA (LED OFF), 110mA (LED ON)	55mA (LED OFF), 110mA (LED ON)	40mA (LED OFF), 60mA (LED ON)
DVR	Screen	Super bright high-definition color LCD screen		
	Screen Resolution	1024*600 LCD (7" or 10.1" optional)		
	Image	Support image rotation		
	Video Resolution	AHD 1080P / CVBS D1		
	Video Encoding	High Compression / H.264		
	Photograph Resolution	1920*1080		
	Audio Recording	Support Local Sound		
	External Memory	Support SD Memory Card up to 64GB		
	LED Driver	Built-in Dimmer		
	Play Back	Video and Photo		
	Language	Simplified Chinese, English, Traditional Chinese, Japanese, Korean, Russian, German, French, Italian, Spanish, Portuguese, Thai, Finnish, Swedish		
	Power Supply	DC 12V input		
	Current Consume	800mA Max		
	Battery Capacity	7.2V 6400mAh Li-ion Battery		
	A Single Charge Work Time	7-8 hour(7") / 6-7 hour(10.1")		
	Charge Time	About 10 hour		
Text Writer	Typing Language	English		
	Max pages	9 Pages		
	Characters per page	500		
	Hide Characters	Quick One Key hiding		
	Keyboard Compatibility	Specifc PC Wireless keyboard		
Cable Wheel	Meter Counter	Bulid-in		
	Precision of Meter	±(10cm + 0.5%) max		
	meter and ft	meter/ft/off		
	Cable Diameter	Φ4.7mm	Φ5.2mm	Φ6.8mm
	Cable Length	20/30/40/60 meter (Optional)	20/30/40 meter (Optional)	20/30/40 meter (Optional)
Tool Box	Size	380×260×150mm(L×W×H)		
	Box color	Black		

[INSTALLATION]

To reduce the risk of serious injury during use, follow these procedures for proper assembly.

1. Install Cable Reel (Figure 6.)

Put the cable reel into the frame from the right side, place it in the right direction and then tighten the screws and nut. Pull out the cable with care, thread it through the guiding wheel and lead the cable out.

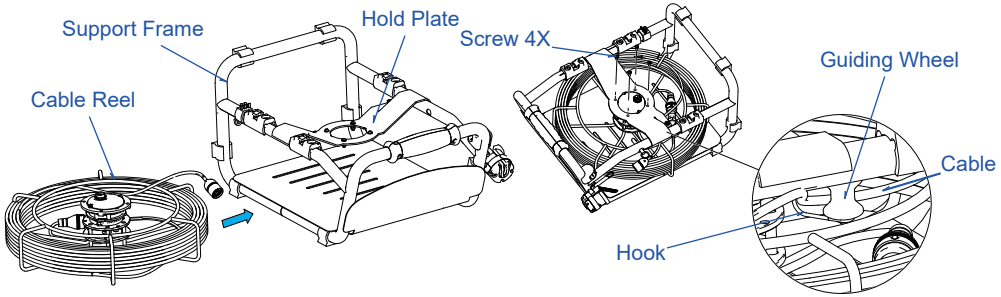

Figure 6. Install Cable Reel

2. Install Toolbox Unit (Figure 7.)

Step 1. Plug one end of the spring cable into the cable wheel aviation socket according to the direction(direction of long straight cable), and tighten the screw, Finally adjust the length and fixed it on the wire clip.
Step 2.Clip the toolbox holder into the fixed seat on the frame, and push it inside according to the direction.
Step 3.Thread the ball lock pin through the toolbox holder and the frame.
Step 4.Connect the other end of the spring cable with the aviation socket of the toolbox and tighten the screw(direction of long spring cable).

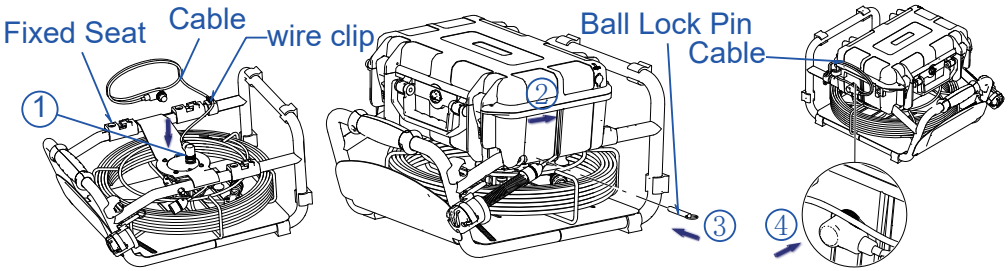

Figure 7. Install Toolbox Unit

3. Install Camera Head (Figure 8.)

Hold the cable connector in one hand, then screw the camera and fix it on the cable tightly.

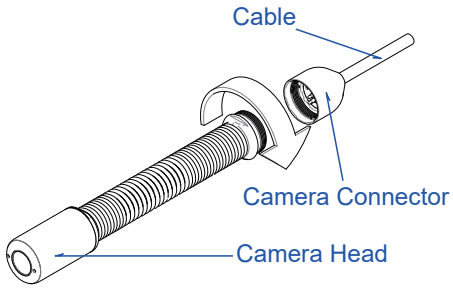

Figure 8. Install Camera Head

4. Install guide fitting

Roller skids are used to keep the camera head in the center of dif f erent sized pipes and also to keep camera head away from mud at the bottom of pipes, in order to keep camera head clean and also view best qualit y images.

4.1. 23mm camera head

a.Install 46 support guides. (Figure 9.)

Mount the 46 support guide onto the stainless steel camera head. Then tighten the screw by screwdriver.

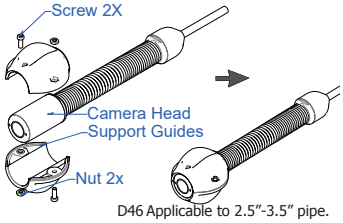

Figure 9. Install 46 Support Guides

b. Install 80 support guides. (Figure 10.)

Mount the 80 support guide onto the stainless steel camera head. Then tighten the screw by screwdriver.

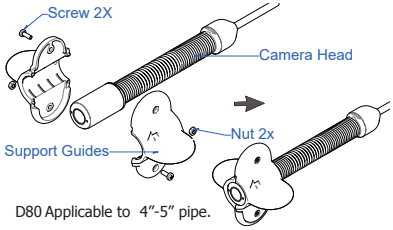

Figure 10. Install 80 Support Guides

4.2. 18mm camera head

Install 28 support guides. (Figure 11.)

Mount the 28 support guide onto the stainless steel camera head. Then tighten the screw by Wrench.

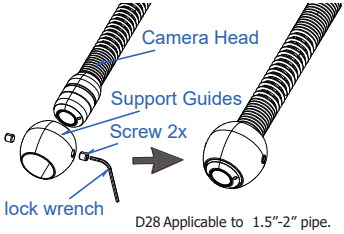

Figure 11. Install 28 Support Guides

4.3. 14mm camera head

Install 28 support guides. (Figure 12.)

Mount the 28 support guide onto the stainless steel camera head. Then tighten the screw by Wrench.

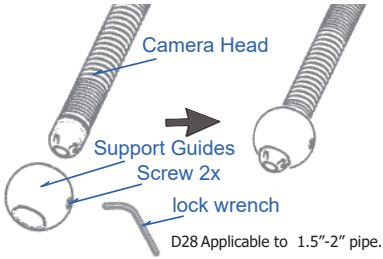

Figure 12. Install 28 Support Guides

5. Install SD card (Figure 13.)

Push the wireless keyboard receiver and SD card in the correct slot as required.

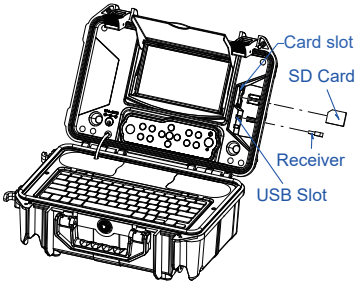

Figure 13. Install SD Card

6. Turn on the DVR.

[FUNCTION GUIDE AND OPERATING INSTRUCTIONS]

DVR icon introduction

1. Meter counter display (meters/feet)
2. LED brightness
3. Record indication
4. Time indication
5 Date indication
6. Sound recording indication
7. SD card
8. Battery level indicator
9. Text writer page No.

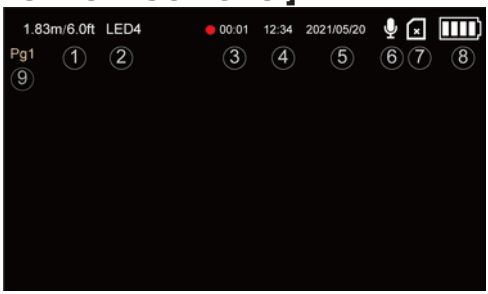

Figure 14. Screen icon

[DVR Operation]

1. Insert the card

Please insert the SD card before using the device. (Hint: In order to ensure the normal operation of the device, please use a Class10 high-speed branded SD card. Please format the SD card for the first time using it)

2. Turn On/Off

Press the [ ] key to turn on/off, and it will automatically enter the real-time image mode when it is turned on.

3. Function Buttons

Light adjustment: In the real-time image mode, press the [LED] to decrease or increase the brightness of the LEDs.

Image rotation: In real-time image mode, press the [ ] to realize image rotation.

Take a photo: In the real-time image mode, press the [ ] to take a photo, and the photo will be saved in the photo folder of the SD card.

Record a Video: In the real-time image mode, press the [REC] to start/stop recording a video, and the video file will be saved in the video folder of the SD card.

Menu setting: In the real-time image mode, press the [MENU] to enter the menu setting.

Image magnification: In the real-time image mode, press the [ ] to realize image magnification.

Exit/Return: During parameter setting and file management, press [ ] to exit or return.

Meter-Zero: In the real-time image mode, press the [Meter Zero] to set the meter to zero on screen display.

4. Parameter Settings

Under real-time image mode, press [MENU] to enter the parameter setting; press [◀] and [▶] to select the menu you need to change, press [▲] and [▼] to select the submenu that you need to change, and press [OK HOME] to confirm the submenu you need to change; press [▲] and [▼] to select the value you need to change, press [OK HOME] to confirm and save the settings; press [↩] to exit the setting.

4.1 Recording settings

Camera Head: To select the correct camera head type.

Loop recording: 5min/10min/30min, the recorded files are divided according to the set size, and the system will automatically prompt on screen when the card is full.

Encoding type: To set video compression format according to the requirements of use.

Sound switch: you can turn on or off the recording sound.

Exposure setting: The sensitivity of photo and video shooting can be set according to the brightness of the environment in order to improve the shooting effect.

4.2 Display settings:

Screen brightness: You can set the display brightness of the screen.

Meter Counter settings: To set the unit of length (meter/ft) . Also can turn off the meter counter display.

4.3 System settings:

Format: The capacity of the SD card can be displayed, and the user can format the SD card.

Language settings: Simplified Chinese, English, Traditional Chinese, Japanese, Korean, Russian, German, French, Italian, Spanish, Portuguese, Thai, Finnish, Swedish.

Light source frequency: different light source frequencies can be set according to actual needs.

Volume: To set the volume of the recorded sound.

Date and time: To adjust date and time.

Time zone selection: You can choose the actual time zone of your area.

Restore factory settings: In case of abnormality, the factory settings can be restored.

Device information: system version information.

5. File Management

In the real-time image mode, press the [▶] key to enter the folder, and the user can browse, play or delete recorded videos or photos.

Browse files: After entering the folder, press the [▲] and [▼] keys to browse the media files.

Playback files: After entering the folder, press the [▲] and [▼] keys to select the media file to be played back, press the [OK HOME] key to play or pause the play. During playing a video or photo, press the [▲] key to play the previous file, press [▼] Key to play the next file.

Fast forward and fast rewind: During playing a video, press the [▶] key to fast forward playback, press the [◀] key to fast reverse playback, and press the [OK HOME] key to pause playback.

Delete Files:

a. After entering the folder, press the [▲] and [▼] keys to select the media file to be deleted. Press the [MENU] key to enter the delete mode, press the [◀] and [▶] keys to select whether or not to delete the media file, and press the [OK HOME] key to delete or cancel the deletion of the media file.

b. During playing back a file, you can also delete or cancel the deletion of media files according to the above steps.

[TEXT WRITER OPERATION]

The keyboard text writer is used to type characters with the wireless keyboard and display on screen. The characters can be displayed in recorded video or captured photo. It supports max. 19 line and 30 row characters per page , and up to 9 pages.

Text Input

1. Typing characters with wireless keyboard. Using arrow key to move cursor, backspace key to delete ,and enter key to change a new line. Ctrl+S key to save present page to DVR memory.
2. Esc key to hide or appear all characters in present page. Ctrl + Del key to delete all characters in present page.
3. Page Up key and Page Down key change page No.
4. You can type and edit characters while recording, the typing and editing will be recorded in the video fles.



Figure 15. Text Input

[METER COUNTER OPERATION]

1. Press the meter-zero button to set the meter to zero on screen display.

2. Set the unit of length (meter/ft) or turn off the meter counter display. Please refer to meter counter settings prior to this operation.

3. Set the total length of push cable to Cable wheel (this is designed in case the total length record in Cable wheel inconsistent with the facts). Press and hold [Meter Zero] button within 3 seconds after DVR monitor starts. When the "L=**m" fashes, press [▲] or [▼] button to select the total length. Press [OK HOME] button to save and exit. Then Cable wheel will record and save the total length automatic.

Note1: The deviation of MC will increase if the total length is not correct. You need to select the correct total length to decrease the deviation. Use this function to change the displayed total length when the push cable is cut off for more than 5 meters.
Note 2: Turn on the system before pulling out the push cable from the cable reel. It can decrease the deviation of the MC.

[PUSH CABLE AND CAMERA OPERATION]

At the job site

1. Always wear rubber gloves to operate the camera for health and safety reasons. Properly positioning the cable reel will save time and strength to push out and in the cable, and minimize the rate of equipment damage.

- When pushing, the end of your stroke should be as close to the entry as possible. Standing too far back with an excess of cable between your hands and the entry may cause the cable to fold on itself outside the entry and damage the cable.
- Try to keep the push cable away from sharp edge of a pipe entry because this may cause damage. If the camera does not seem to go any farther, **DO NOT FORCE TO PUSH THE CAMERA!** Try another entry if possible.

NOTE! Hands should be close to the line opening. DO NOT catch the cable on the edge of an entry and continue to push.

2. Always try to run water down the pipe under going inspection. This will keep the system much cleaner, and allow you to push noticeably farther with less friction. If the water is preventing you from seeing an area of importance, temporarily turn it off.

3. When push the push cable through the pipeline by steady and slowly, a short distance entry per time, keeps the hands at the entrance, so that can control the push cable and prevent it stuck, bent or scratch.

4. When inspecting a pipe, most of the time a slow steady push through the system works the best. At changes in direction such as P-traps, Tee's, Y's, Elbows, etc. It is usually necessary to give a little extra push in the bends. Back the camera head approximately 8" (20cm) from the bend, if necessary, and give it a quick push, "popping" the camera through a turn, using the least amount of force required. Try to be as gentle as possible, and do not hammer or snap the camera head through corners. After some practice, you may learn that the best way to inspect a section of pipe is to push the camera through quickly. Then draw the camera back home slowly and evenly.

5. Make sure the sapphire window is clean prior to entry. Some users claim that a slight film of detergent on the lens minimizes the possibility of grease sticking to the port. If necessary, take advantage of any standing water in the pipe to wash the front of the camera by jiggling it in the water.

6. When you place the camera head into the pipe remember, as the materials of pipe vary, it will be necessary to adjust the lighting settings to maximize picture quality.

7. The system can travel through multiple 45 and 90 degree bends and wyes. Do not, however, try to force it through a P-trap or tee if there is a large amount of resistance.

NOTE! Do not try to use the camera head to clear obstructions. This System is a diagnostic tool, not a drain cleaner. Using the camera head to clear obstructions could damage the camera head or cause it to be caught in the obstruction.

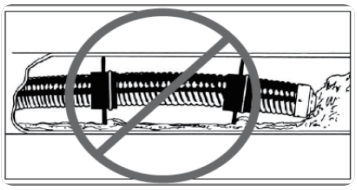

Figure 16. Improper operation

8. Do not attempt to remove or stores push cable on the reel solely by turning the reel itse if. You can manually push or pull cable from the reel and wind or unwind it.

9. If the camera sits in a pipe, or an enclosed environment, heat will build-up. This may lead to the camera head overheating which will cause fuzzy lines to appear on the monitor. In the event, this happens, turn off the system, remove the camera from the pipe (or enclosed environment) and let the camera head cool for 10 to 15 minutes. Running water into the line will also help cool the camera head. Always use the minimum illumination required to maximize picture quality and to avoid excessive heat build-up.

NOTE! The camera head can get HOT! When finished with your inspection, or if taking a prolonged break in the middle of the inspection, turn off the system.

Retrieving the push cable

1. Once the inspection has been completed, pull the push cable back with slow, steady force. Do not force the push cable or exert excessive force. This could damage the camera or push cable. The push cable may get hung up while being retrieved, and may need to be manipulated as did during insertion.

2. While take back the push cable, running water can be used to flush down the push cable. After recycling, you can wipe the push cable with a towel.

Note! NEVER USE SOLVENTS to clean any part of the system. Substances like acetone and other harsh chemicals can cause cracking of the camera ring, which could affect waterproofing.

3. Storing the push cable into the cable reel. One hand holds the push cable, the other hand close to the cable wheel. Slowly and gently push the push cable slide via the hook of the handle, cable reel will rotate and store the push cable inside.

Note! The hands should be close to the cable wheel when storing the push cable. Push the push cable a small piece every try. Push a long distance can cause the push cable bend or broken.

[BATTERY SAFETY AND USING GUIDE]

Using safety

Read the following battery precautions before charger, to reduce the risk of electrical shock.

1. Recharge batteries with accessory charging units.
2. Check the power units every time before using the equipment, be sure no problem, use of unauthorized parts may result in electrical shock, fire and/or serious personal injury or damage other instruments and system.
3. Never connects the car charger to any 24 volt cigarette lighter slot. It will harm the battery and DVR.
4. Do not short circuit, it may cause fire, electrical shock.
5. Do not charge the battery under rain or wet conditions. Water entering the charger will increase the risk of electrical shock.
6. If the charger and battery are damaged, do not use or stop to charge. It may cause electrical shock.
7. Don't disassemble the case, only qualified repair person can repair and maintenance.
8. Properly dispose of the battery. Exposure to high temperatures can cause the battery to explode. So do not dispose of in a fire. Some countries have regulations concerning battery disposal. Please follow all applicable regulations.
9. Do not touch anything which out from battery, which would burn or damage the skin, once touches please flush with water. If in eyes, immediately get medical help fast.

Using Guide

Follow the steps as below to reduce the injury of the electric shock.

1. Power indicator LED will be red during charging, will be turned to green when charged fully. If battery empty for a long term, it will pre-charge the battery automatically in 10 minutes, and LED will be blinking in red.
2. It needs about 10 hours to charge the battery fully. The battery can charge online, charging and supplying of work will not increase charging times.
3. User can use a power adaptor or car charger to charge the battery. If no use in a long term, take a recharge per 6 month, to ensure the battery in normal working status.

[OTHERS]

Troubleshooting

Problem	Probable fault location	Solution
Confused image show on screen	Wrong Camera Head option	Enter the setup menu and select the correct camera head type (1080P/CVBS D1).
The DVR do not recognize SD memory card.	SD Card is faulty.	Format the SD card using a PC. Change an other SD memory card.
	Gold fingers on the SD card are dirty.	Clean the gold finger on the SD card.
	SD card slot in the DVR may fault.	Check the SD card slot in the DVR .
No image	Cable connection faulty or loosely	Check cable connection, clean and reconnect if necessary
	Camera connector soiled	Clean the camera connector
	Wrong SD memory card	Turu off power and replace SD card
	Wrong setting	Enter the setup menu and select reset
DVR Can not boot	No power	Recharge
	Transient short circuit in the cable cause the battery short circuit protection	Recharge the DVR more than 2 seconds with adaptor or car-charger to activate the battery
Can not input Characters	The wireless keyboard low battery	Chang battery
	Wireless Keyboard or Receiver fault	Check the Keyboard Receiver and the keyboard on a PC
The deviation of MC more than 0.5%	select the wrong total length	Press and hold [Meter Zero] button within 3 seconds after DVR monitor starts to select the total length.
	Pull out cable more than 3 meters before turning on the system	Turn on the system before pulling out the push cable from the cable reel
DVR charging indicator lights up green and cannot be charged	The battery temperature exceeds the range of -5~+48°C	Put the product under normal temperature for 30 minutes to automatically resume charging
When charging, the yellow and green charging indicator lights are not on	Power adapter failure	Replace a power adapter

FCC Statement

This device complies with part 15 of the FCC Rules. Operation is subject to the following two conditions:

1. This device may not cause harmful interference.
2. This device must accept any interference received, including interference that may cause undesired operation. Any changes or modification not expressly approved by the party responsible for compliance could void the user's authority to operate the device.

CE

This product complies with standards including Low Voltage Device Directive 2014/35/EU;

EMC

Directive 2004/108/EC. It passed the subject tests by the authority concerned and is authorized to bear CE mark.

Trade Tuff Contact:

Trade Tuff
Unit 21
Western Road
Stratford Upon Avon
CV37 0AH
United Kingdom

Tel: +44 (0)800 292 2188
Email : info@tradetuff.co.uk
Web: www.tradetuff.co.uk