E30406

Voltage converter

VOLTAGE CONVERTER

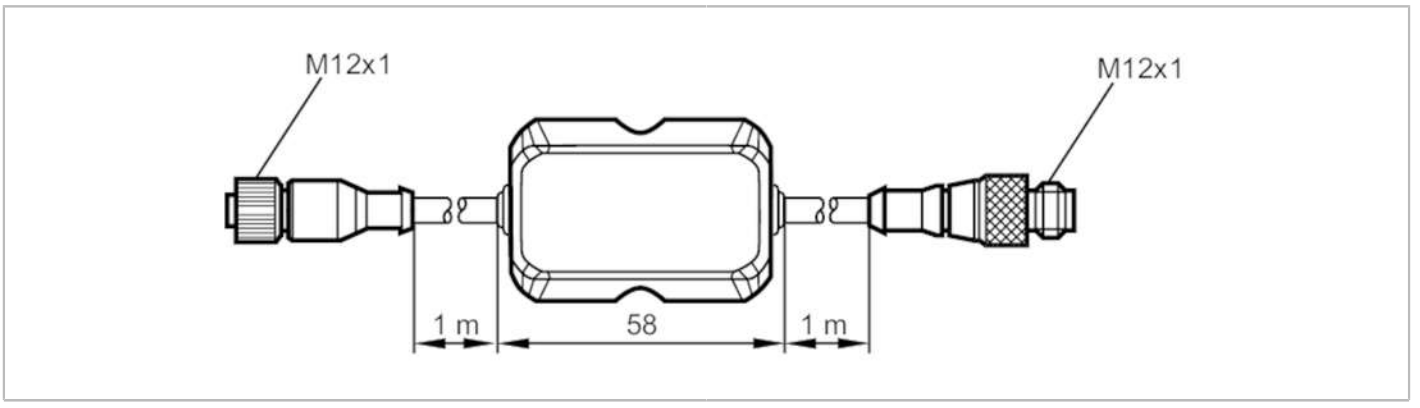

Electrical data			
Nominal voltage DC	[V]	9...27	
Current consumption	[mA]	< 500	
Protection class		III	
Reverse polarity protection		yes	
Outputs			
Short-circuit protection		yes	
Operating conditions			
Ambient temperature	[°C]	-25...70	
Protection		IP 40	
Tests / approvals			
EMC		EN 61000-4-2 ESD	4 kV CD / 15 kV AD
		EN 61000-4-3 HF radiated	30 V/m (80...1000 MHz)
		EN 61000-4-4 Burst	2 kV coupling clamp
		EN 61000-4-6 HF conducted	10 V (0,15...80 MHz)
Mechanical data			
Weight	[g]	151	
Materials		PBT-GF20	
Sealing material		FKM	
Remarks			
Pack quantity		1 pcs.	
Electrical connection - socket			
Cable: 1 m, PUR			
Connector: 1 x M12; Moulded body: TPU, orange; Locking: brass, nickel-plated; Sealing: FKM			

E30406

Voltage converter

VOLTAGE CONVERTER

Electrical connection

Connection

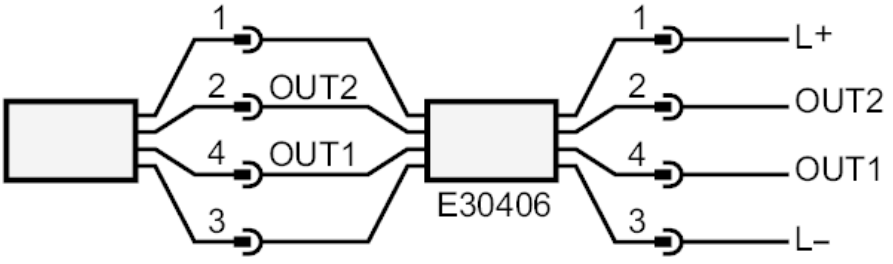

Electrical connection - plug

Cable: 1 m, PUR

Connector: 1 x M12; Moulded body: TPU, orange; Locking: brass, nickel-plated; Sealing: FKM