RAMO 30 T M12, round collar, ring illumination, momentary contact function, frontring stainless steel, Color red, 1 NO, bezel stainless steel



fields of application

- Measurement-control-regulation
- Electrical engineering
- Mechanical and system engineering
- Vehicle construction
- Chemical industry
- Industrial robots

special features

- Key stroke with tactile feedback or mushroom pushbutton with latching actuator
- Based on the RAFI MICON 5 short-travel keyswitch with gold contacts, which has proven itself millions of times over
- Single-part, closed housing
- Unique series with easiest Plug&Play connection
- Completely tailored design – fits the RAFIX range of control components
- Flat overall height
- Stainless steel front ring
- Installation size: 30.3 mm
- Plug & Play connection M12
- Custom print options, including FLEXLAB bezels
- Can be illuminated in many colors
- Redundant version with 2 NO contacts
- Pushbutton with black mushroom head

description

Because it features the RAFI MICON 5 tactile switch, RAMO 30 T offers tactile feedback with a noticeable click. Due to the IP 66/ IP69K degree of protection, it is recommended in particular for plant engineering and construction. RAMO 30 T requires a mounting hole diameter of 30.3 mm and offers an extremely flat design of the front panel.

As a further product variant, the RAMO 30 T mushroom pushbutton offers a latching pushbutton option for every application. It is characterised by form and function as for an emergency stop, but is only declared as a pushbutton. Various contact functions are possible.

Additional information according to UL certificate:
For Class 2 Power Source or Limited Voltage / Limited Current only
Installation only by trained specialist personnel.
Type 4x Indoor only with cable "Cat. No. 7000-08061-0210100 PUR 4x0.25mm² with M8 connector, rated max. 30VAC/DC 4A, manufactured by Murrelektronik GmbH" and "Cat. No. 7000-12221-0340100 PUR 4x0.34mm² with M12 connector, rated max. 30VAC/DC 4A, manufactured by Murrelektronik GmbH"
For Use on a Flat Surface of a Type 1 or 4x indoor only Enclosure.

The information in this data sheet only contains general descriptions and / or performance features, which may not apply precisely as described to the respective application, and which my change due to further product enhancements. The technical data, illustrations and other information about our products are the mere results of individual technical testing. These descriptions and other product features are only binding if they expressly agreed upon at the time of the conclusion of a binding contract. In all other cases, we reserve the right to make technical changes as well as changes of availability. Pictures and other graphic illustrations are approximations only. All product names may be trademarks or brand names of the RAFI Group or any other sub-supplier of RAFI. The use of such by any third parties for their own purposes may infringe the rights of the respective entity holding those rights.

RAFI GmbH & Co. KG

Ravensburger Str. 128-134
88276 Berg / Ravensburg
Germany
www.rafi-group.com,
info.headquarters@rafi-group.com

technical data

general

Potential free	yes
Color	black
Bezel color	stainless steel
Collar color	black
Front ring color	stainless steel
Ring lighting color	red
Collar shape	round
Operating temperature, min.	-40 °C
Operating temperature, max.	85 °C
Storage temperature, min.	-40 °C
Storage temperature, max.	85 °C
illuminated	Yes
Luminous elements	LED
Packaging	Box
Packaging unit	10 pcs.
net weight	26.3 g
Operating life	500,000 cycles
B10	650,000 cycles
Degree of protection, front side, according to DIN EN 60529	IP66 IP67 IP69
Degree of protection, rear side, according to DIN EN 60529	IP66 IP67
UL Enclosure Type Rating front side	type 4X indoor
Environment resistance	IEC 60068-2-14 IEC 60068-2-30 IEC 60068-2-78
Salt-spray resistance according to standard	IEC 60068-2-11
Impact resistance IK	05
MOQ order	10 pcs.
Pollution degree acc. to DIN EN 61010-1	Pollution degree 2
RoHS compliant	Yes
REACH compliant	Yes

mounting diameters

Outside dimension, length	34.5 mm
Outside dimension, width	34.5 mm
Outside dimension, height	40 mm
Mounting hole	30.3 mm
Mounting depth	36.4 mm
Installation height	3.6 mm
Grid, min.	35 mm

direct links

- RAFI eCatalog

The information in this data sheet only contains general descriptions and / or performance features, which may not apply precisely as described to the respective application, and which my change due to further product enhancements. The technical data, illustrations and other information about our products are the mere results of individual technical testing. These descriptions and other product features are only binding if they expressly agreed upon at the time of the conclusion of a binding contract. In all other cases, we reserve the right to make technical changes as well as changes of availability. Pictures and other graphic illustrations are approximations only. All product names may be trademarks or brand names of the RAFI Group or any other sub-supplier of RAFI. The use of such by any third parties for their own purposes may infringe the rights of the respective entity holding those rights.

RAFI GmbH & Co. KG

Ravensburger Str. 128-134
88276 Berg / Ravensburg
Germany
www.rafi-group.com,
info.headquarters@rafi-group.com

mechanical data

Actuation function	momentary contact function
Operating force, max.	12 N
Operating force, min.	5 N
Operating travel, max.	1 mm
Resistance to force on the side	300 N
Contact function	1 NO
Contact material	Gold
Fixing	Threaded ring
Threaded ring torque, max.	1.2 Nm
Terminal on the rear	M12 4-pin A-coded
PIN 1	Normally open contact 1
PIN 2	LED +
PIN 3	GND
PIN 4	Normally open contact 1

electrical data

Rated insulation voltage	250 V
Rated surge voltage	800 V
Rated operating voltage	35 V (AC-15) 35 V (DC-13)
Operating voltage of the luminous element, min.	20 V
Operating voltage of the luminous element, max.	28 V
Rated voltage, min.	0.02 V
Rated voltage, max.	35 V
Rated voltage, max. acc. to UL 60947	30 V DC (42,4 V peak)
Voltage type	DC
Rated operating current	0.1 A
Rated operating voltage	0.02-35 V
Rated current, min.	0.00001 A
Rated current, max.	0.1 A
Rated power, max.	1 W
Power loss	0.70040 W
Overvoltage category	2
Kind of short circuit protective device	fuse 250 V / 0,1 A / 1,5 kA gG quick
Conditional short circuit current	1,000 A

The information in this data sheet only contains general descriptions and / or performance features, which may not apply precisely as described to the respective application, and which my change due to further product enhancements. The technical data, illustrations and other information about our products are the mere results of individual technical testing. These descriptions and other product features are only binding if they expressly agreed upon at the time of the conclusion of a binding contract. In all other cases, we reserve the right to make technical changes as well as changes of availability. Pictures and other graphic illustrations are approximations only. All product names may be trademarks or brand names of the RAFI Group or any other sub-supplier of RAFI. The use of such by any third parties for their own purposes may infringe the rights of the respective entity holding those rights.

RAFI GmbH & Co. KG

Ravensburger Str. 128-134
88276 Berg / Ravensburg
Germany
www.rafi-group.com,
info.headquarters@rafi-group.com

drawings

Dimensioned drawing

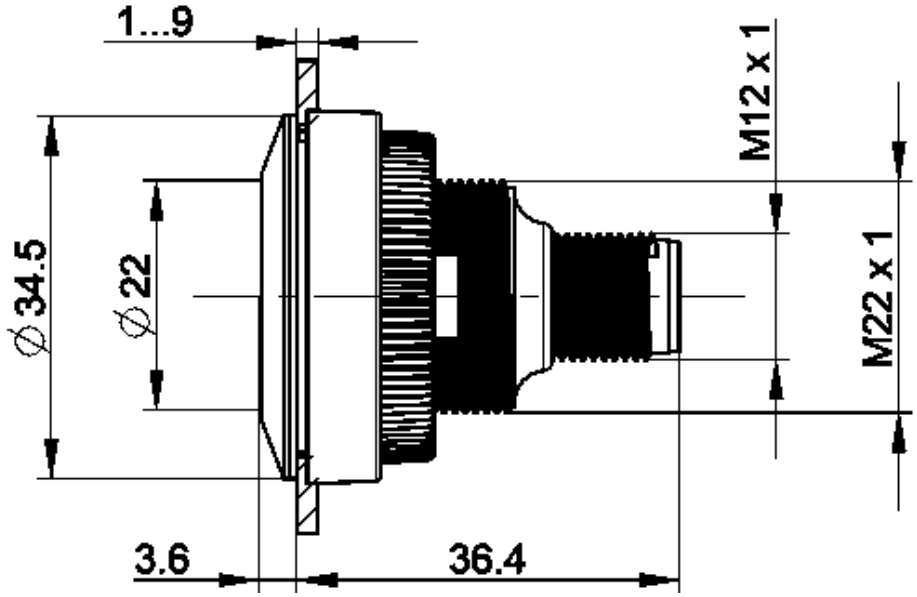

Mounting hole drawing

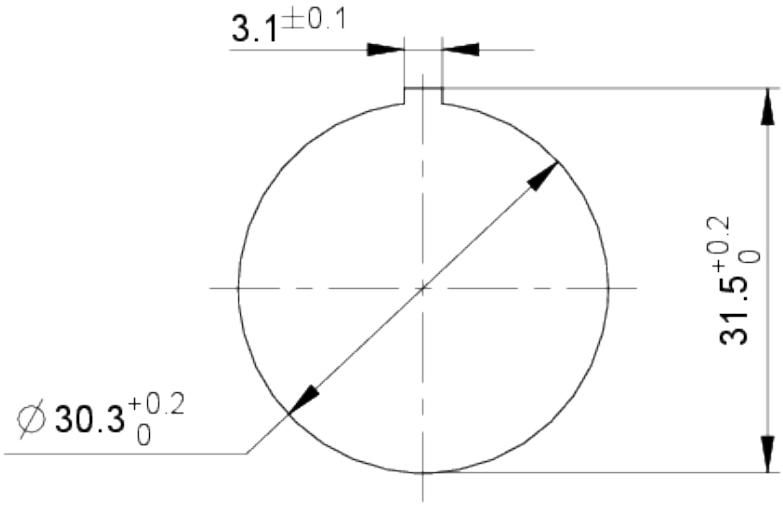

The information in this data sheet only contains general descriptions and / or performance features, which may not apply precisely as described to the respective application, and which my change due to further product enhancements. The technical data, illustrations and other information about our products are the mere results of individual technical testing. These descriptions and other product features are only binding if they expressly agreed upon at the time of the conclusion of a binding contract. In all other cases, we reserve the right to make technical changes as well as changes of availability. Pictures and other graphic illustrations are approximations only. All product names may be trademarks or brand names of the RAFI Group or any other sub-supplier of RAFI. The use of such by any third parties for their own purposes may infringe the rights of the respective entity holding those rights.

RAFI GmbH & Co. KG

Ravensburger Str. 128-134
88276 Berg / Ravensburg
Germany
www.rafi-group.com,
info.headquarters@rafi-group.com

Schematic diagram

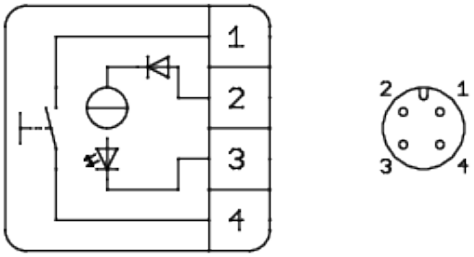

The information in this data sheet only contains general descriptions and / or performance features, which may not apply precisely as described to the respective application, and which my change due to further product enhancements. The technical data, illustrations and other information about our products are the mere results of individual technical testing. These descriptions and other product features are only binding if they expressly agreed upon at the time of the conclusion of a binding contract. In all other cases, we reserve the right to make technical changes as well as changes of availability. Pictures and other graphic illustrations are approximations only. All product names may be trademarks or brand names of the RAFI Group or any other sub-supplier of RAFI. The use of such by any third parties for their own purposes may infringe the rights of the respective entity holding those rights.

RAFI GmbH & Co. KG

Ravensburger Str. 128-134
88276 Berg / Ravensburg
Germany
www.rafi-group.com,
info.headquarters@rafi-group.com