E11918

Hexagon nut

NUT M16x1,5 CUZN 10PCS.

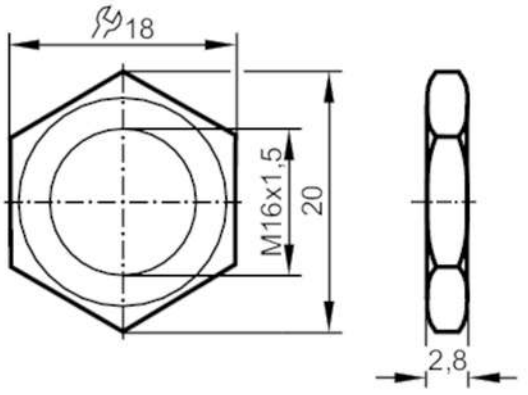

Mechanical data		
Weight	[g]	31
Dimensions	[mm]	20 x 18 x 2.8
Thread designation		M16 x 1.5
Materials		brass nickel-plated

Remarks	
Pack quantity	10 pcs.