OT5013

Retro-reflective sensor

OTR-FPKG/US-100-IPF

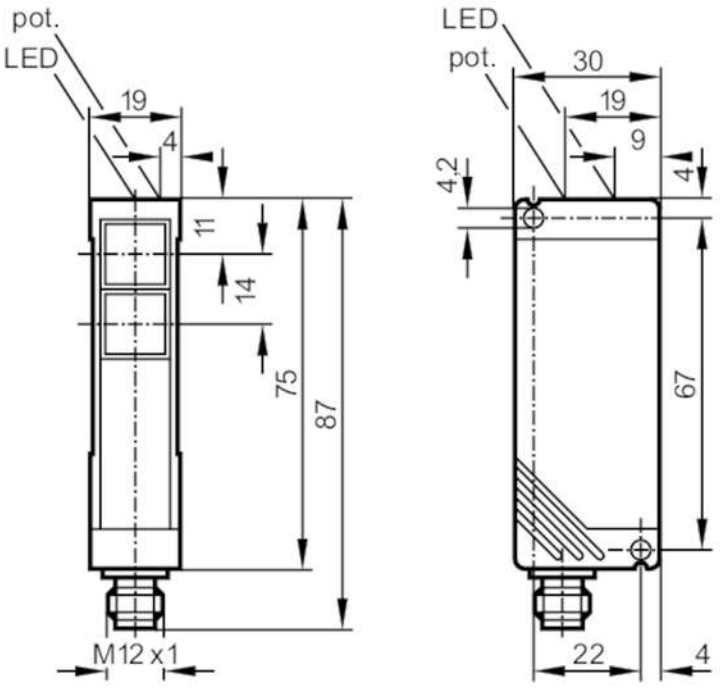

receiver in lower lens
transmitter in upper lens

Product characteristics		
Type of light		infrared light
Housing		rectangular
Application		
Function principle		Retro-reflective sensor
Electrical data		
Operating voltage	[V]	10...50 DC
Current consumption	[mA]	40; ((24 V))
Protection class		II
Reverse polarity protection		yes
Type of light		infrared light
Wave length	[nm]	880
Outputs		
Electrical design		PNP
Output function		light-on/dark-on mode; (programmable)
Max. voltage drop switching output DC	[V]	2.5
Permanent current rating of switching output DC	[mA]	250
Switching frequency DC	[Hz]	150
Short-circuit protection		yes

OT5013

Retro-reflective sensor

OTR-FPKG/US-100-IPF

Type of short-circuit protection			pulsed
Overload protection			yes
Detection zone			
Range referred to prismatic reflector	[m]		0.15...5; (Prismatic reflector Ø 80 E20005)
Range adjustable			yes
Max. light spot diameter	[mm]		262
Light spot dimensions refer to			at maximum range
Operating conditions			
Ambient temperature	[°C]		-25...60
Protection			IP 65
Tests / approvals			
EMC		EN 60947-5-2	
MTTF	[years]		583
Mechanical data			
Weight	[g]		161.5
Housing			rectangular
Dimensions	[mm]		75 x 19 x 30
Materials			PBT
Lens material			PMMA
Lens alignment			side lens
Displays / operating elements			
Display		switching status	1 x LED, yellow
		operation	1 x LED, green
Accessories			
Items supplied			Angle bracket: 1, E20461
			screwdrivers
Remarks			
Pack quantity			1 pcs.
Electrical connection			

Connector: 1 x M12; coding: A



OT5013

Retro-reflective sensor

OTR-FPKG/US-100-IPF

Connection



Diagrams and graphs

excess gain graph

