Elite 100 & Elite 300

Multi-line three phase panel meter

Pass through mechanism

Best-in-class accuracy

Alerts

MFM with configurability, easy to install and use, and alerts to act

The Elite series is a multi-line three-phase digital panel meter for reliable and accurate true-RMS measurement of electrical parameters (voltage, current, power, frequency etc.) for industrial and commercial applications.

It is available in two display types, LED display (Elite 100) and LCD display (Elite 300), with MODBUS communication, pulse output or alarm output as an option.



Application

- Commercial and industrial sub-metering
- Energy Management System (EMS) applications
- Building management and monitoring systems (BMS)
- High and medium voltage switchgear panels
- Power control centre (PCC) panels
- Motor control centre (MCC) panels
- LV distribution panels
- Control and relay panels
- Automation and monitoring systems

Benefits

- Multiple electrical parameters in a single device
- Quick and easy installation with unique pass through concept for current termination (with minimal burden)
- Single product suitable for a variety of panel applications, through field configuration
- Wide-range aux input makes it suitable for a variety of installation scenarios
- Alerts on display for monitoring critical parameters
- User-friendly touch-sense keys for easy display access and configuration
- Modbus communication (optional) for system integration

Features

- Four-line alphanumeric LED / LCD display with 7 digits for energy and 5 digits for instantaneous parameters
- Reliable and accurate measurement
- User configurable alert thresholds for various parameters
- Unique pass through mechanism for current termination
- Wide-range AC / DC auxiliary power supply
- High level of protection degree
- Display of minimum and maximum values
- THD measurement for voltage and current, up to 31st harmonic
- Current and power demand monitoring
- Option for RS-485, pulse output or alarm output
- True root-mean squared (RMS) metering
- Password-protected setup mode
- On-site setup for wiring configuration (3P3W / 3P4W)
- Auto unit scaling for voltage, current, power and energy
- Scroll-lock feature support
- Configurable modbus registers for ease of integration (modbus variants only)

SECURE energy together

Elite 100 & Elite 300 Series

Features		Elite 100 & 300					
	LED	101		102	103	104	105
	LCD	301	30A / 30B	302 / 306	303 / 307	304 / 308	309
Phase-to-neutral voltage (L1, L2, L3)		●	●	●	●	●	●
Phase-to-phase voltage (L12, L23, L31)		●	●	●	●	●	●
Average voltage		●	●	●	●	●	●
Line current (L1, L2, L3)		●	●	●	●	●	●
Neutral current		●	●	●	●	●	●
Average current		●	●	●	●	●	●
System frequency		●	●	●	●	●	●
Power factor (L1, L2, L3)		●	●	●	●	●	●
Average power factor		●	●	●	●	●	●
VAF phase-wise (L1, L2, L3)		●	●	●	●	●	●
Active power (L1, L2, L3)		●	●	●	●	●	●
Total active power		●	●	●	●	●	●
Apparent power (L1, L2, L3)		●	●	●	●	●	●
Total apparent power		●	●	●	●	●	●
Reactive power (L1, L2, L3)		●	●	●	●	●	●
Total reactive power		●	●	●	●	●	●
Current demand (L1, L2, L3, Total)		●	●	●	●	●	●
Power demand (L1, L2, L3, Total)		●	●	●	●	●	●
Active import / export energy				●	●	●	●
Active forwarded energy		●	●	●	●	●	●
Apparent when active import / export energy				●	●	●	●
Apparent forwarded energy		●	●	●	●	●	●
Reactive import / export energy				●	●	●	●
Reactive lag / lead forwarded energy				●	●	●	●
Net active energy*				●	●	●	●
Gross active import / export energy**				●	●	●	●
RPM		●	●	●	●	●	●
Run hours		●	●	●	●	●	●
THD Voltage(L1, L2, L3)		●	●	●	●	●	●
THD Current(L1, L2, L3)		●	●	●	●	●	●
Min / max values		●	●	●	●	●	●
Modbus on RS-485			●		●		
Pulse output (Single)						●	
Alarm output (Single)							●

Note:

* Net = Import - export energy

**Gross = Sum of all import / export energy

Technical specifications

Electrical	LED	LCD
Connection type	Common product for 1P2W / 3P3W / 3P4W applications	
Voltage		
Measuring voltage range	20 V to 500 V	
Nominal voltage range (U_n)	57.5 V to 240 V (phase to neutral), 100 V to 415 V (phase to phase)	
Over voltage	150% of U_n continuous	
Current		
Measuring current range	50 mA to 6A	
Nominal current range (I_n)	1 A or 5 A	
Overload	150% of I_n continuous	
Frequency range	45 to 65 Hz	
Power factor	0.1 lag - Unity - 0.1 lead (for I_n and U_n)	
Short- time over current	120 A for 1 sec	
Auxiliary power supply range	40 to 300 V AC / DC	
Accuracy Class		
Voltage (V), Current (A)	±0.5% FS	
Power	±0.5% FS (at unity PF)	
Power factor (PF)	±0.005	
Frequency (F)	±0.1 Hz	
Active energy	Class 1.0 (acc. to IEC 62053-21)	Class 1.0 (acc. to IEC 62053-21) Class 0.5s (acc. to IEC 62053-22)
Reactive energy	Class 2 (acc. to IEC 62053-23)	
Temperature coefficient	Voltage, current: 0.05% / °C	
Burden		
Voltage circuit	<0.2 VA per phase	
Current circuit	1 A: <0.1 VA per phase ; 5 A: <0.4 VA per phase	
Auxiliary supply	<4.5VA	<3.5VA

Mechanical	LED	LCD
Bezel size	96 x 96 x 55 mm (70.8 mm with parking terminals)	
Panel cut-out	92 x 92 mm	
Tolerance	+0.5mm	
Weight	Approx 320 grams	
Enclosure	Flame Retardant Polycarbonate (as per UL 94 V0)	
Terminals		
Voltage/auxiliary	Combicon connectors: up to 2.5 mm^2 cable	
Current	Pass-through CT connection: up to 2.5 mm^2 cable	
Parking terminal for CT terminations (optional) Digital output / RS-485 / alarm output	U-type / ring-type terminations: maximum up to 2.5 mm^2 cable Combicon connectors: up to 2.5 mm^2 cable	

Programming	LED	LCD
CT / PT(VT) ratio	Field-programmable primary and secondary values PT(VT) primary up to 2000 kV, CT primary up to 15000 A	
RPM	Field-programmable pole (0-18) and slip (00.00 to 99.99%)	
Alerts	Field-programmable high and low threshold values	
Demand interval	Field-programmable: 1 to 60 minutes	
Modbus registers	User programmable 25 modbus addresses via software (Modbus variants only)	

Display	LED	LCD
Number of lines	4 lines	
Number of digits	7 digits for energy parameters, 5 digits for instantaneous parameters	
Energy resolution	Up to 0.01 resolution	
Character size	14.2 mm x 8.1 mm	10.2 mm x 6.3mm
Bar-graph		Yes (7 steps up to 150%)

Elite 100 & Elite 300 Series

Environmental	LED	LCD
Protection degree (as per IEC 60529)	Front fascia: IP 54 default / IP 65 with gasket (Optional), terminals: IP 20	
ESD	IEC / EN 61000-4-2 (in accordance to standard IEC / EN 61326)	
EFT	IEC / EN 61000-4-4 (in accordance to standard IEC / EN 61326)	
Insulation	CAT III, 4 kV RMS 50 Hz for 1 minute	
Impulse withstand	6.5 kV	
Temperature	-10°C to +60°C (operating); -25°C to +80°C (storage)	
Humidity	95% non condensing	
Flame retardation	UL 94 V0	
Maximum altitude	2000 m	

Compliance	LED	LCD
Standards	IEC / EN 61557-12, IEC / EN 62053-21, IEC / EN 62053-22 & IEC / EN 62053-23 & IEC / EN 62053-31, IS13779, IS14697 Safety: IEC / EN 61010-1; IEC / EN 61010-2-030	

Options	LED	LCD
RS-485	Modbus: half-duplex, floating point, refresh rate: 500 ms User configurable - Baud rate: 1200 to 19200 bps (default 9600 bps); Parity bit: None, Odd, Even; Stop Bit: 1, 2	
Pulse output (Single)	24V to 240V DC or 48 to 240V AC @ 100 mA. Pulse width option of 80 / 240 / 300 ms	
Alarm output (Single)	N/O type, voltage rating 230V AC @ 2A. Pulse width option of 80 / 240 / 300 ms	

Accessories	LED	LCD
Software (ConfigView)	www.securemeters.com	

Ordering codification

ELITE **XX** **Y**

XX Display
10 = LED
30 = LCD

Y Function

1	VAF + Power + PF + Active / Apparent forwarded Energy (Class 1)
2	VAF + Power + PF + Energy (Class 1)
3	VAF + Power + PF + Energy (Class 1) + Modbus
4	VAF + Power + PF + Energy (Class 1) + Pulse Output
5	VAF + Power + PF + Energy (Class 1) + Alarm Output**
6	VAF + Power + PF + Energy (Class 0.5s)*
7	VAF + Power + PF + Energy (Class 0.5s) + Modbus*
8	VAF + Power + PF + Energy (Class 0.5s) + Pulse Output*
9	VAF + Power + PF + Energy (Class 0.5s) + Alarm Output*
A	VAF + Power + PF + Active / Apparent forwarded Energy (Class 1) + Modbus*
B	VAF + Power + PF + Active / Apparent forwarded Energy (Class 0.5s) + Modbus*

Ordering key: ELITE XXY-2
Example: ELITE 102-2
where LED display (10),
VAF + Power + PF + Energy (Class1) (2),
Fixed digit for Secure (2)

* Link to LCD range only
** Link to LED range only

Dimensions (mm)

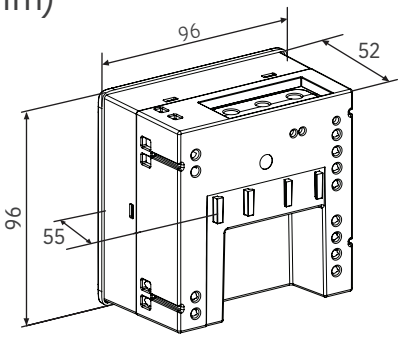

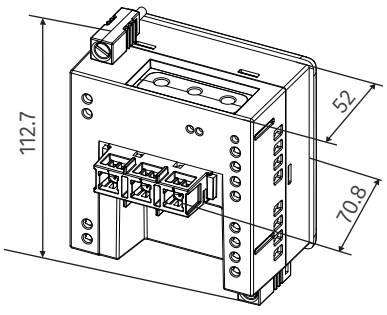

Specifications are subject to change without prior notice

Australia
sales_australia@securemeters.com
www.securemeters.com/au

Europe
sales_europe@securemeters.com
www.securemeters.com/eu

India, SE Asia, Africa
sales_india@securemeters.com
www.securemeters.com/in

UAE
sales_middleeast@securemeters.com
www.securemeters.com/me

UK
sales_uk@securemeters.com
www.securemeters.com/uk

www.securemeters.com