EVCA07

Connection cable

VDOGH050MSD00,3C05STGH050MSS

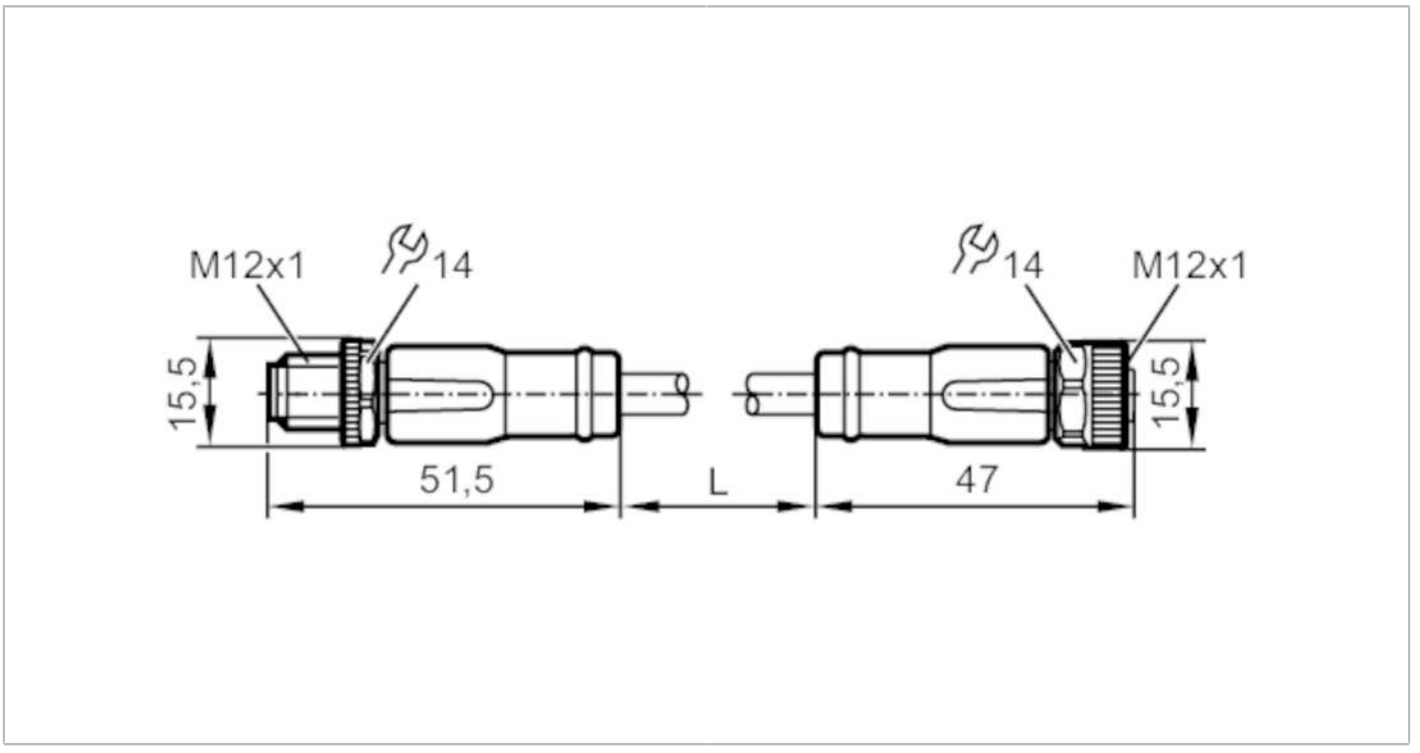

Application		
Special feature		Halogen-free; Gold-plated contacts; Screened cable; Drag chain suitability
Application		CAN bus
Electrical data		
Operating voltage	[V]	< 30 AC / < 36 DC
Max. current load total	[A]	4
Operating conditions		
Ambient temperature	[°C]	-25...80
Storage temperature	[°C]	-25...55
Storage humidity	[%]	10...100
Other climatic conditions for storage according to stated class		1K22/ DIN 60721-3-1
Protection		IP 67; IP 68; IP 69K
Mechanical data		
Weight	[g]	69.4
Moulded-body material		TPU
Material nut		brass, nickel-plated
Sealing material		FKM
Drag chain suitability		yes
Drag chain suitability	bending radius for flexible use	min. 10 x cable diameter
	travel speed	max. 3.3 m/s for a horizontal travel length of 5 m and max. acceleration of 5 m/s²
	bending cycles	> 5 Mio.
	torsional strain	± 180 °/m

EVCA07

Connection cable

VDOGH050MSD00,3C05STGH050MSS

Remarks	
Pack quantity	1 pcs.

Electrical connection - plug

Connector: 1 x M12, straight; coding: A; Moulded body: TPU, black; Locking: brass, nickel-plated; Contacts: gold-plated; Tightening torque: 0.6...1.5 Nm

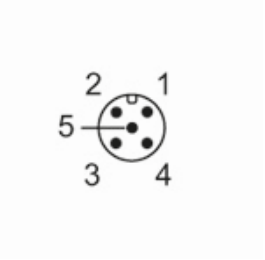

Electrical connection

Cable: 0.3 m, PUR, Halogen-free, lilac, Ø 8.4 mm, shielded; RD / BK: 2 x 0.75 mm² (42 x Ø 0.15 mm) + WH / BU: 2 x 0.5 mm² (19 x Ø 0.19 mm) + screen: 1 x 0.75 mm² (42 x Ø 0.15 mm)

Connection

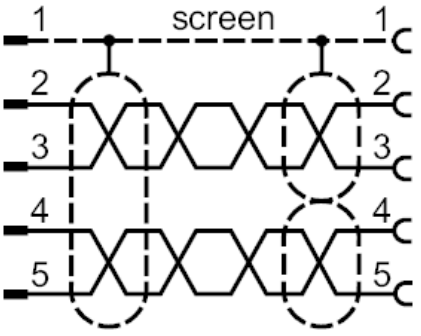

Electrical connection - socket

Connector: 1 x M12, straight; coding: A; Moulded body: TPU, black; Locking: brass, nickel-plated; Sealing: FKM; Contacts: gold-plated; Tightening torque: 0.6...1.5 Nm

