Multiple-Spring Wire Plug : BÜLA 20 K

Multiple-spring wire plug, shatter-proof, flexible insulating sleeve with transverse hole. The tapering sleeve end also serves as kinking protection for the lead. Screw connection up to maximum cable cross-section of 1.5 qmm. Nickel-plated brass contact material.

- **Specification:**

Operating voltage:	60 V DC
Working current:	16 A
Contact resistance:	3 mΩ
Temperature range:	-25°C up to +70°C
Termination:	screw

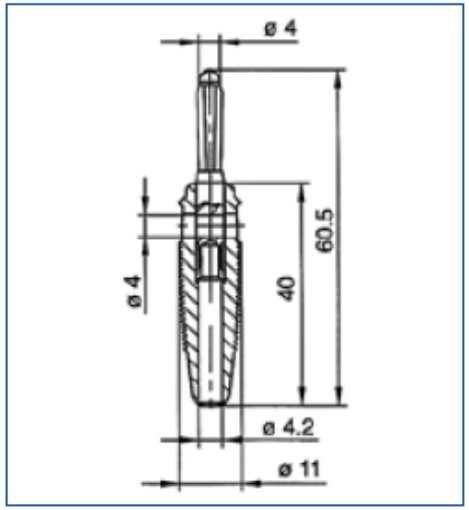



Item:	Type:	Colour:	≥ 1	≥ 10	≥ 50
930726100	BÜLA 20 K	black			
930726101	BÜLA 20 K	red			
930726102	BÜLA 20 K	blue			
930726103	BÜLA 20 K	yellow			
930726104	BÜLA 20 K	green			